# Regenerative DC Electronic Load

## IT-M3800 Series User Manual

Model: IT-M3800 Series
Version: V1.0/01,2022

# Notices

© Itech Electronic, Co., Ltd. 2022
No part of this manual may be reproduced in any form or by any means (including electronic storage and retrieval or translation into a foreign language) without prior permission and written consent from Itech Electronic, Co., Ltd. as governed by international copyright laws.

## Manual Part Number

402225

## Trademarks

Pentium is U.S. registered trademarks of Intel Corporation.
Microsoft, Visual Studio, Windows and MS Windows are registered trademarks of Microsoft Corporation in the United States and/or other countries and regions.

## Warranty

The materials contained in this document are provided “as is”, and is subject to change, without prior notice, in future editions. Further, to the maximum extent permitted by applicable laws, ITECH disclaims all warrants, either express or implied, with regard to this manual and any information contained herein, including but not limited to the implied warranties of merchantability and fitness for a particular purpose. ITECH shall not be held liable for errors or for incidental or indirect damages in connection with the furnishing, use or application of this document or of any information contained herein. Should ITECH and the user enter into a separate written agreement with warranty terms covering the materials in this document that conflict with these terms, the warranty terms in the separate agreement shall prevail.

## Technology Licenses

The hardware and/or software described herein are furnished under a license and may be used or copied only in accordance with the terms of such license.

## Restricted Rights Legend

Restricted permissions of the U.S. government. Permissions for software and technical data which are authorized to the U.S. Government only include those for custom provision to end users. ITECH follows FAR 12.211 (technical data), 12.212 (computer software). DFARS 252.227-7015 (technical data–commercial products) and DFARS 227.7202-3 (permissions for commercial computer software or computer software documents) while providing the customized business licenses of software and technical data.

## Safety Notices

**CAUTION**

A CAUTION sign denotes a hazard. It calls attention to an operating procedure or practice that, if not correctly performed or adhered to, could result in damage to the product or loss of important data. Do not proceed beyond a CAUTION sign until the indicated conditions are fully understood and met.

**WARNING**

A WARNING sign denotes a hazard. It calls attention to an operating procedure or practice that, if not correctly performed or adhered to, could result in personal injury or death. Do not proceed beyond a WARNING sign until the indicated conditions are fully understood and met.

**Note**

A NOTE sign denotes important hint. It calls attention to tips or supplementary information that is essential for users to refer to.

# Quality Certification and Assurance

We certify that series instrument meets all the published specifications at time of shipment from the factory.

# Warranty

ITECH warrants that the product will be free from defects in material and workmanship under normal use for a period of one (1) year from the date of delivery (except those described in the Limitation of Warranty below).

For warranty service or repair, the product must be returned to a service center designated by ITECH.

- The product returned to ITECH for warranty service must be shipped PREPAID. And ITECH will pay for return of the product to customer.
- If the product is returned to ITECH for warranty service from overseas, all the freights, duties and other taxes shall be on the account of customer.

# Limitation of Warranty

This Warranty will be rendered invalid in case of the following:

- Damage caused by circuit installed by customer or using customer own products or accessories;
- Modified or repaired by customer without authorization;
- Damage caused by circuit installed by customer or not operating our products under designated environment;
- The product model or serial number is altered, deleted, removed or made illegible by customer;
- Damaged as a result of accidents, including but not limited to lightning, moisture, fire, improper use or negligence.

Copyright © Itech Electronic Co., Ltd.

# Safety Symbols

| | | | |
|---|---|---|---|
| | Direct current | | ON ( power) |
| | Alternating current | | OFF ( power) |
| | Both direct and alternating current | | Power-on state |
| | Chassis (earth ground) symbol. | | Power-off state |
| | Earth ( ground) terminal | | Reference terminal |
| | Caution | | Positive terminal |
| | Warning ( refer to this manual for specific Warning or Caution information) | | Negative terminal |
| | A chassis terminal | - | - |

# Safety Precautions

The following safety precautions must be observed during all phases of operation of this instrument. Failure to comply with these precautions or specific warnings elsewhere in this manual will constitute a default under safety standards of design, manufacture and intended use of the instrument. ITECH assumes no liability for the customer's failure to comply with these precautions.

Copyright © Itech Electronic Co., Ltd.

**WARNING**

- **Do not use the instrument if it is damaged. Before operation, check the casing to see whether it cracks. Do not operate the instrument in the presence of inflammable gasses, vapors or dusts.**
- **The instrument is provided with a power cord during delivery and should be connected to a socket with a protective earth terminal, a junction box or a three-phase distribution box. Before operation, be sure that the instrument is well grounded.**
- **Please always use the provided cable to connect the instrument.**
- **Check all marks on the instrument before connecting the instrument to power supply.**
- **Ensure the voltage fluctuation of mains supply is less than 10% of the working voltage range in order to reduce risks of fire and electric shock.**
- **Do not install alternative parts on the instrument or perform any unauthorized modification.**
- **Do not use the instrument if the detachable cover is removed or loosen.**
- **To prevent the possibility of accidental injuries, be sure to use the power adapter supplied by the manufacturer only.**
- **We do not accept responsibility for any direct or indirect financial damage or loss of profit that might occur when using the instrument.**
- **This instrument is used for industrial purposes, do not apply this product to IT power supply system.**
- **Never use the instrument with a life-support system or any other equipment subject to safety requirements.**

Copyright © Itech Electronic Co., Ltd.

WARNING

- **SHOCK HAZARD Ground the Instrument. This product is provided with a protective earth terminal. To minimize shock hazard, the instrument must be connected to the AC mains through a grounded power cable, with the ground wire firmly connected to an electrical ground (safety ground) at the power outlet or distribution box. Any interruption of the protective (grounding) conductor or disconnection of the protective earth terminal will cause a potential shock hazard that could result in injury or death.**
- **Before applying power, verify that all safety precautions are taken. All connections must be made with the instrument turned off, and must be performed by qualified personnel who are aware of the hazards involved. Improper actions can cause fatal injury as well as equipment damage.**
- **SHOCK HAZARD, LETHAL VOLTAGES This product can input the dangerous voltage that can cause personal injury, and the operator must always be protected from electric shock. Ensure that the input electrodes are either insulated or covered using the safety covers provided, so that no accidental contact with lethal voltages can occur.**
- **Never touch cables or connections immediately after turning off the instrument. Verify that there is no dangerous voltage on the electrodes or sense terminals before touching them.**
- **After using the device, turn off the power switch of the device before unplugging the power cord or disassembling the terminals. Do not touch the cable or the terminal immediately. Depending on the model, the dangerous voltage at the plug or terminal is maintained for 10 seconds after the device is switched off. Make sure that there is no dangerous voltage before touching them.**

CAUTION

- **Failure to use the instrument as directed by the manufacturer may render its protective features void.**
- **Always clean the casing with a dry cloth. Do not clean the internals.**
- **Make sure the vent hole is always unblocked.**

# Environmental Conditions

The instrument is designed for indoor use and an area with low condensation. The table below shows the general environmental requirements for the instrument.

| Environmental Conditions | Requirements |
|---|---|
| Operating temperature | 0°C ~ 50°C |
| Operating humidity | 20% ~ 80%( non-condensation) |
| Storage temperature | -10°C ~ 70 °C |
| Altitude | Operating up to 2,000 meters |
| Installation category | II |
| Pollution degree | Pollution degree 2 |

**Note**

In order to ensure the accuracy of measurement, it is recommended to operate the instrument half an hour after start-up.

# Regulation Tag

| | |
|---|---|
| CE | The CE tag shows that the product complies with the provisions of all relevant European laws (if the year is shown, it indicates that the year when the design is approved). |
| UK CA | The UKCA tag shows that the product complies with the provisions of all relevant United Kingdom laws (if the year is shown, it indicates that the year when the design is approved). |
| | This instrument complies with the WEEE directive (2002/96/EC) tag requirements. This attached product tag shows that the electrical/electronic product cannot be discarded in household waste. |
| 10 | This symbol indicates that no danger will happen or toxic substances will not leak or cause damage in normal use within the specified period. The service life of the product is 10 years. The product can be used safely within the environmental protection period; otherwise, the product should be put into the recycling system. |

Copyright © Itech Electronic Co., Ltd.

# Waste Electrical and Electronic Equipment (WEEE) Directive

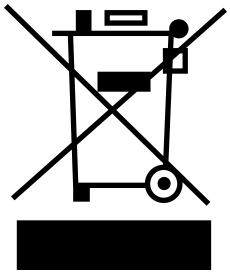

Waste electrical and electronic equipment (WEEE) directive, 2002/96/EC
The product complies with tag requirements of the WEEE directive (2002/96/EC). This tag indicates that the electronic equipment cannot be disposed of as ordinary household waste. Product Category
According to the equipment classification in Annex I of the WEEE directive, this instrument belongs to the “Monitoring” product.
If you want to return the unnecessary instrument, please contact the nearest sales office of ITECH.

# Compliance Information

Complies with the essential requirements of the following applicable European Directives, and carries the CE marking accordingly:

- Electromagnetic Compatibility (EMC) Directive 2014/30/EU
- Low-Voltage Directive (Safety) 2014/35/EU

Conforms with the following product standards:

## EMC Standard

IEC 61326-1:2012/ EN 61326-1:2013 [1][2][3]

Reference Standards

CISPR 11:2015+A1:2016 Ed 6.1

IEC 61000-3-2: 2018 RLV

IEC 61000-3-3: 2013+A1:2017

IEC 61000-4-2:2008

IEC 61000-4-3 2006+A1:2007+A2:2010/ EN 61000-4-3 A1:2008+A2:2010

IEC 61000-4-4:2012

IEC 61000-4-5:2014+A1:2017

IEC 61000-4-6:2013+cor1:2015

IEC 61000-4-11:2004+A1:2017

1. The product is intended for use in non-residential/non-domestic environments. Use of the product in residential/domestic environments may cause electromagnetic interference.
2. Connection of the instrument to a test object may produce radiations beyond the specified limit.
3. Use high-performance shielded interface cable to ensure conformity with the EMC standards listed above.

## Safety Standard

IEC 61010-1:2010+A1:2016

Content

Quality Certification and Assurance ..... I
Warranty ..... I
Limitation of Warranty ..... I
Safety Symbols ..... II
Safety Precautions ..... II
Environmental Conditions ..... IV
Regulation Tag ..... V
Waste Electrical and Electronic Equipment (WEEE) Directive ..... VI
Compliance Information ..... VII
1 Quick Reference ..... 1
1.1 Brief Introduction ..... 1
1.2 Front-Panel Overview ..... 3
1.3 Keyboard Introduction ..... 4
1.4 Push-on Knob ..... 6
1.5 Rear Panel Introduction ..... 7
1.6 VFD Indicator Lamps Description ..... 8
1.7 Configuration Menu Function ..... 9
1.8 System Menu Function ..... 10
1.9 Options Introduction ..... 15
2 Inspection and Installation ..... 17
2.1 Verifying the Shipment ..... 17
2.2 Instrument Size Introduction ..... 18
2.3 Connecting the Power Cord ..... 20
2.4 Connecting the Device Under Test (DUT) ..... 25
2.5 Remote Interface Connection ..... 29
2.5.1 USB Interface ..... 29
2.5.2 LAN Interface ..... 30
2.5.3 CAN Interface ..... 34
2.5.4 GPIB Interface (Optional) ..... 36
2.5.5 RS–232 Interface (Optional) ..... 37
3 Getting Started ..... 39
3.1 Power-on Self-Test ..... 39
3.2 Set Input Value ..... 43
3.3 Use the Front Panel Menu. ..... 43
3.4 On/Off Control ..... 44
4 Load Function ..... 45
4.1 Programming the Input ..... 45
4.1.1 Select the Operation Mode (Mode) ..... 45
4.1.2 Basic Operation Mode ..... 46
4.1.3 Complex Operation Mode ..... 47
4.1.4 Set the Input-On/Input-Off Delay Time ( On Delay/ Off Delay ) ..... 49
4.1.5 Set I-Rise / I-Fall Slope ( I-Rise / I-Fall Slope ) ..... 49
4.1.6 Set V-Rise / V-Fall Slope ( V-Rise / V-Fall Slope ) ..... 50
4.1.7 Set P-Rise / P-Fall Slope ( P-Rise / P-Fall Slope ) ..... 50
4.1.8 Short-Circuit Analog Function ..... 50
4.1.9 VON Function ( Von ) ..... 51
4.2 Advanced Feature ..... 53
4.2.1 LIST Function ..... 53
4.2.2 Battery Discharging Test Function ..... 58
4.3 Protection Function ..... 59
4.3.1 Set Over-Current Protection (OCP) ..... 61
4.3.2 Set Over-Power Protection (OPP) ..... 62
4.3.3 Set Under-Voltage Protection (UVP) ..... 63
4.3.4 Over-Temperature Protection (OTP) ..... 63
4.3.5 Sense Reverse Protection ..... 64

Copyright © Itech Electronic Co., Ltd. 

5 Basic Operation ..... 66
5.1 Local/Remote Mode Switch ..... 66
5.2 Key Lock Function ..... 67
5.3 Save and Recall Operations ..... 67
5.3.1 Save Operation ..... 68
5.3.2 Recall Operation ..... 68
5.4 Data Logging Function ..... 68
5.5 Set the Beeper Status (Beep) ..... 71
5.6 Set the Power-on State (PowerOn) ..... 72
5.7 Sense Function (Sense) ..... 74
5.8 Select Trigger Source (Trig Source) ..... 74
5.9 Set the Communication Information (I/O Con) ..... 76
5.10 Set Parallel Operation Mode (Parallel) ..... 76
5.11 Digital I/O Function (Digital Port) ..... 79
5.11.1 IO–1. Ps-Clear, Not-Invert ..... 81
5.11.2 IO–2. Ps, Not-Invert ..... 84
5.11.3 IO–3. Off-Status, Not-Invert ..... 85
5.11.4 IO–4.Trig(in), Not-Invert ..... 87
5.11.5 IO–5. INH-Living, Not-Invert ..... 90
5.11.6 IO–6. Sync-On, Not-Invert ..... 93
5.11.7 IO–7. Sync-Off, Not-Invert ..... 96
5.12 Analogue Function (Ext-Program) (Optional) ..... 98
5.13 View the System Information (System Info) ..... 103
5.14 Restored to Factory Setting (System Reset) ..... 104
5.15 Observe Power Grid Information (AC-Meter) ..... 107
5.16 Display Loading Time (Disp on timer) ..... 107
5.17 System Upgrade ..... 108
6 Technical Specification ..... 111
6.1 Main Specification ..... 111
6.1.1 IT-M3801-10-120 ..... 112
6.1.2 IT-M3802-10-240 ..... 114
6.1.3 IT-M3803-10-360 ..... 116
6.1.4 IT-M3807-10-720 ..... 119
6.1.5 IT-M3806-80-120 ..... 121
6.1.6 IT-M3812-80-240 ..... 123
6.1.7 IT-M3806-300-60 ..... 126
6.8 Supplemental Characteristics ..... 129
7 Routine Maintenance ..... 130
7.1 Instrument Self-Test ..... 130
7.2 Cleaning and Maintenance ..... 130
7.3 Contact of ITECH Engineers ..... 131
7.4 Return for Repair ..... 132
A Appendix ..... 134
A.1 Specifications of Red and Black Test Cables ..... 134
A.2 Fuse Replacement ..... 135

Copyright © Itech Electronic Co., Ltd.

# 1 Quick Reference

This Chapter will introduce power-on check steps of this series to ensure normal start-up and usage under initialization status of the load. Besides, to facilitate usage, this part also displays the functions of front board, rear board and key-board keys as well as display functions to a quick view of load appearance, structure and key usage functions before operation.


♦ Brief Introduction
♦ Front-Panel Overview
♦ Keyboard Introduction
♦ Push-on Knob
♦ Rear Panel Introduction
♦ VFD Indicator Lamps Description
♦ Configuration Menu Function
♦ System Menu Function
♦ Options Introduction


## 1.1 Brief Introduction

IT-M3900 series integrates the features of a DC power supply, a bi-directional power supply, a source and load system, and a regenerative electronic load in one. It keeps the advantages of high power density and architecture design of M series, power up to 6kw, current up to 510A, and voltage up to 1500V within one 1U unit, effectively reducing the equipment occupation space and cabinet time. wide-range models could meet different test requirements while matching with multi-functional, high energy-saving, high-safety, and high-stability product design, let the customer be confident to face a variety of complex testing, improving the products competition ability.

IT-M3800 series regenerative DC electronic load can not only perform as a DC load, but also feed back power to the grid, which saves electricity and cooling costs for you. It can complete high-precision output and measurement, and supports multiple protection functions. It is well applied to the test of 5G communication and data center, industrial components test, aging test, PV and energy storage test, power optimizer and other fields.

**FEATURE**

- Compact design, 1U@6kW, 2U@12kW
- Voltage range: 10~1500V
- Current range: 8A~720A

- Power range: 12kW
- Master/slave parallel connection with patented technology - keep good performance while power extension
- Efficient power regeneration - reduce cost of electricity and cooling
- Slope of voltage, current and power is settable
- Battery discharge test
- Short-circuit simulation
- List function, max.200 steps
- 8 operation modes under Source mode：CC/CV/CW/CP/ CC+CV/CV+CR/ CR+CC/CC+CV+CW+CR
- Von function - On/Off control
- Multiple protection: OVP / ±OCP / ±OPP / OTP /voltage transient drop protection/anti-islanding
- Power grid automatic detection
- Pre-charge to prevent current overshoot
- Built-in USB/CAN/LAN/digital IO interfaces, Optional GPIB/ Analog& RS232

| Voltage Level | Model | Current | Power | Height |
|---|---|---|---|---|
| 10V | IT-M3801-10-120 | 120A | 1.2KW | 1U |
| | IT-M3802-10-240 | 240A | 2.4KW | 1U |
| | IT-M3803-10-360 | 360A | 3.6KW | 1U |
| | IT-M3807-10-720 | 720A | 7.2KW | 2U |
| 32V | IT-M3802-32-80 | 80A | 2KW | 1U |
| | IT-M3804-32-160 | 160A | 4KW | 1U |
| | IT-M3806-32-240 | 240A | 6KW | 1U |
| | IT-M3812-32-480 | 480A | 12KW | 2U |
| 80V | IT-M3802-80-40 | 40A | 2KW | 1U |
| | IT-M3804-80-80 | 80A | 4KW | 1U |
| | IT-M3806-80-120 | 120A | 6KW | 1U |
| | IT-M3812-80-240 | 240A | 12KW | 2U |
| 300V | IT-M3802-300-20 | 20A | 2KW | 1U |
| | IT-M3804-300-40 | 40A | 4KW | 1U |

Copyright © Itech Electronic Co., Ltd.

| Voltage Level | Model | Current | Power | Height |
|---|---|---|---|---|
| | IT-M3806-300-60 | 60A | 6KW | 1U |
| | IT-M3812-300-120 | 120A | 12KW | 2U |
| 500V | IT-M3802-500-12 | 12A | 2KW | 1U |
| | IT-M3804-500-24 | 24A | 4KW | 1U |
| | IT-M3806-500-36 | 36A | 6KW | 1U |
| | IT-M3812-500-72 | 72A | 12KW | 2U |
| 800V | IT-M3802-800-8 | 8A | 2KW | 1U |
| | IT-M3804-800-16 | 16A | 4KW | 1U |
| | IT-M3806-800-24 | 24A | 6KW | 1U |
| | IT-M3812-800-48 | 48A | 12KW | 2U |
| 1500V | IT-M3806-1500-12 | 12A | 6KW | 1U |

**Note**

Naming rules for each series of model are as follows: IT-M38*XX*-*YYY*-*ZZZ*, wherein, *XX* means rated power; *YYY* means rated voltage; and *ZZZ* means rated current.

# 1.2 Front-Panel Overview

The front panel of this series of instruments is shown in the figure below.

**1U Model**

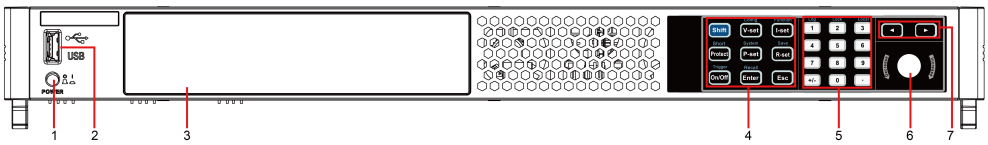


1 Power On/Off switch
2 USB storage device connection port
3 Vacuum fluorescent display (VFD)
4 Function and composite keys
5 Numeric and composite keys
6 Push-on knob
7 Left, and right cursor navigation keys

**2U Model**

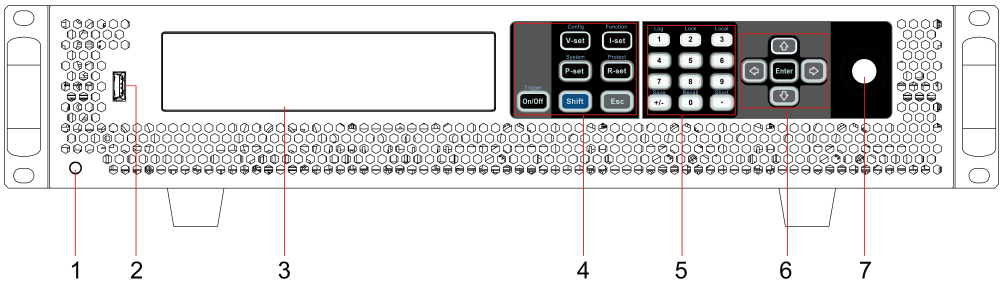


1 Power On/Off switch
2 USB storage device connection port
3 Vacuum fluorescent display (VFD)
4 Function and composite keys
5 Numeric and composite keys
6 Up, down, left, and right cursor navigation keys and Enter key
7 Push-on knob

# 1.3 Keyboard Introduction

The keyboard introduction of this series instrument is shown as follows.

**1U Model**

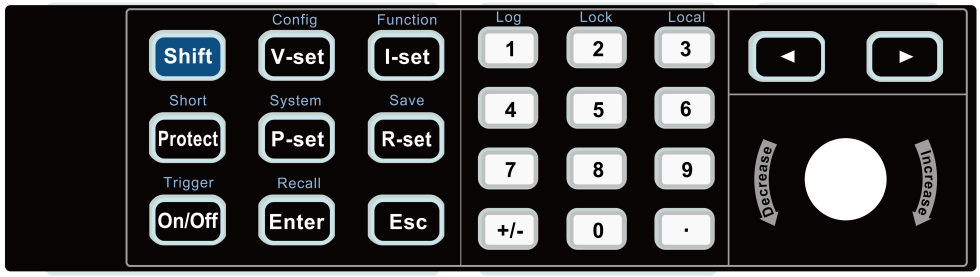


**2U Model**

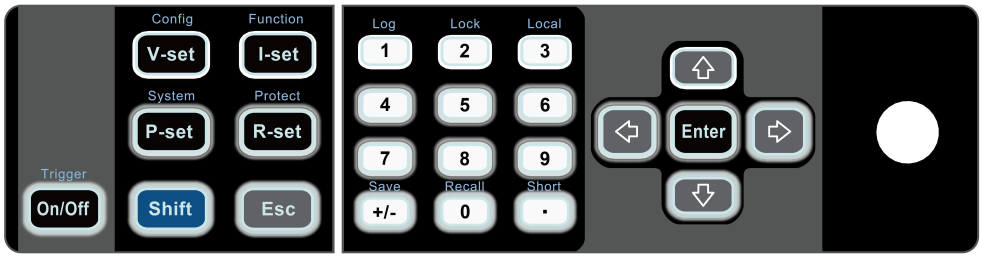

| Keys | Description |
|---|---|
| **[Shift]** | Composite key, combined with other keys to realize functions marked above keys. |
| **[Protect]** | Enter the **Protect** menu. |
| **[On/Off]** | Turn the load input on or off. When lit, indicates that the input is enabled or on. |
| **[V-set]** | Set the input voltage value |
| **[I-set]** | Set the input current value |
| **[P-set]** | Set the input power value |
| **[R-set]** | Set the resistance value |
| **[Enter]** | Operation confirmation key |
| **[Esc]** | Press this key to exit the current operation interface. |
| **[0]-[9]** | Numeric keys |
| **+/–** | Positive and negative signs |
| **.** | Decimal point |
| Left / Right navigation keys | The left and right navigation keys are used to adjust the cursor to the specified position or scrolls pages to view menu items. |

Composite key **[Shift]**, combined with other keys to realize functions marked above keys. The detailed functions are listed as follows.

**Note**

The **[Shift]+[*XXX*]**(*YYY*) combination key form identified in this document refers to pressing **[Shift]** button first, then press the **[*XXX*]** button, please pay attention to the sequence.

| Keys | Description |
|---|---|
| **[Shift]+[Protect]** (Short) | Short circuit function key |
| **[Shift]+[On/Off]** (Trigger) | Generate a local trigger signal. |

| Keys | Description |
|---|---|
| **[Shift]+[V-set]** (Config) | Enter to **Configuration** menu. |
| **[Shift]+[I-set]** (Function) | Enter the **Function** menu. |
| **[Shift]+[P-set]** (System) | Enter the **System** menu. |
| **[Shift]+[R-set]** (Save) | Save the common parameter settings. |
| **[Shift]+[Enter]** (Recall) | Returns the instrument to the specified setup. |
| **[Shift]+[1]** (Log) | Enter the data logging function menu. |
| **[Shift]+[2]** (Lock) | Turn the keyboard lock on or off. |
| **[Shift]+[3]** (Local) | Switch remote control mode to local control mode. |

# 1.4 Push-on Knob

This series Regenerative DC Electronic Load provides a knob on the front panel as shown in the next figure.

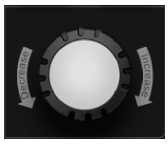

The functions of the posh-on knob is described as follows.

- Adjust the value setting
- Select menu item
- Confirm the set value or the selected menu item

## Adjust the Value Setting

In the value setting interface, rotate the knob clockwise to increase the set value and anticlockwise to decrease the set value.

### Select Menu Item

The knob can also be used to view menu items. In the menu item display interface, turning the knob clockwise indicates that the next menu item is selected, and turning the knob anticlockwise indicates that the previous menu item is selected.

### Confirm settings

After completing the value setting or selecting a menu item, pushing the knob acts like pressing **[Enter]** key to confirm the operation.

# 1.5 Rear Panel Introduction

The rear panel of the of the this series model (after removing the protective cover) is shown below.

1U Models

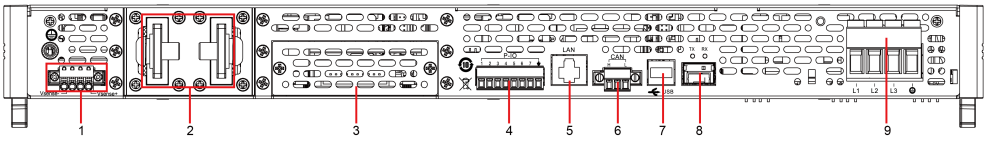


2U Models

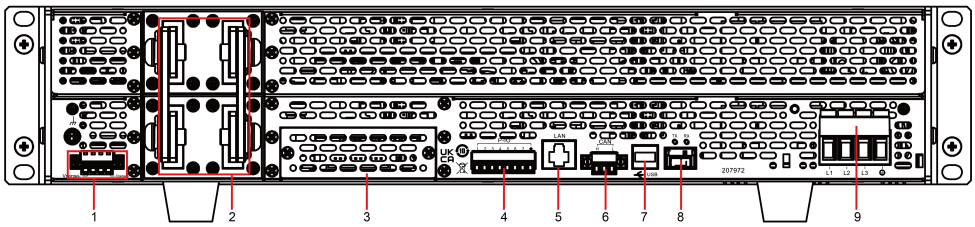


1. Sense terminals (Vs+, Vs-)
2. DC input terminals of the load
3. Interface for optional accessories IT-E176 and IT-E177 (For details, see 1.9 Options Introduction)
4. Digital I/O interface: P-IO
5. LAN communication interface
6. CAN communication interface
7. USB communication interface
8. Communication interface of outer ring optical fiber (TX and RX)

**Note**

This interface is used for the parallel connection between the units for the communication of units in parallel.

9. AC power input terminals (L1, L2, L3, and PE)

# 1.6 VFD Indicator Lamps Description

This series instrument VFD indicator lamps description is as follows:

**Table 1–1 VFD Indicator Lamps Description**

| Flag | Function Description | Flag | Function Description |
|---|---|---|---|
| OFF | The input of the load is turned off. | Sense | Sense function of the load is enabled. |
| CV | The load is in a state of constant voltage input. | Rear | Analog function begin to work. |
| CC | The load is in a state of constant current input. | Addr | When received command successfully, the flag will display 3 seconds. |
| * | The keyboard lock is turned on. | Rmt | Indicates that the instrument is working in remote control mode. |
| CR | The load is in constant resistance state. | Error | Error occur |
| Shift | Using composite function key | Prot | The instrument enters the protection state. |
| SRQ | Indicates that the internal status request event occurs. | Trig | The instrument is in a state of waiting for a trigger. |
| CW | The load is in a constant power input state. | - | - |

# 1.7 Configuration Menu Function

This section gives an overview of the configuration menu of the this series instrument.

The procedures to operate the configuration menu are as follows.

1. Press the composite keys **[Shift]+[V-set]** (Config) on the front panel to enter the configuration menu.

   The VFD shows configuration menu items and each menu item is marked with a number. The user can use knob to scroll pages to view the other menu items.

2. Press **[Enter]** to select the desired menu item.

   Enter the parameter setting interface of this menu item.

3. After finishing the menu setting, press **[Enter]** key to save the setting.

Note

Press **[Esc]** key to return to the previous menu level.

The descriptions of configuration menu of the load are listed in the table below.

| Config | Configuration menu of the load | | |
|---|---|---|---|
| | Mode | Set the operation mode | |
| | | CC | Constant current operation mode |
| | | CV | Constant voltage operation mode |
| | | CW | Constant power operation mode |
| | | CR | Constant resistance operation mode |
| | | CVCC | CV+CC complex operation mode |
| | | CVCR | CV+CR complex operation mode |
| | | CCCR | CC+CR complex operation mode |
| | | AUTO | CC+CV+CW+CR complex operation mode |
| | Speed= High/ Low | Loop speed setting: high speed / low speed. | |
| | On Delay | Set the delay time to turn on the input. | |
| | Off Delay | Set the delay time to turn off the input. | |

| | | | | |
|---|---|---|---|---|
| | I-Rise Slope | Set the current rising time. (only displayed under the CC Mode) | | |
| | I-Fall Slope | Set the current falling time. (only displayed under the CC Mode) | | |
| | V-Rise Slope | Set the voltage rising time. (only displayed under the CV Mode) | | |
| | V-Fall Slope | Set the voltage falling time. (only displayed under the CV Mode) | | |
| | P-Rise Slope | Set the power rising time. (only displayed under the CP Mode) | | |
| | P-Fall Slope | Set the power falling time. (only displayed under the CP Mode) | | |
| | Von | Set Von function | | |
| | | Latch | Latch mode | |
| | | | Level=0.00V | Set the Von value |
| | | Living | Living mode | |
| | | | Level=0.00V | Set the Von value |

# 1.8 System Menu Function

This Chapter offers a general introduction of system menus, allowing users to have a preliminary understanding of system functions of this series instrument.

The steps of the system menu function are as follows:

1. Press the composite keys **[Shift]+[P-set]** (System) on the front panel to enter the system menu.

   At this point, the VFD screen displays the system menu items. Each menu item has a numbering identifier. The user can use the knob for scrolling display of other menu items.

2. Press **[Enter]** on a menu interface to enter the setting interface.

3. After the menu items are set, press **[Enter]** again to save the modified contents.

**Note**

You can press **[Esc]** to return to the previous menu.

The description of the menu items is shown in the table below.

| | | | |
|---|---|---|---|
| Beep | Set the beeper state. | | |
| | On | Turn the beeper on. | |
| | Off | Turn the beeper off. | |
| PowerOn | Set the power-on state. | | |
| | Reset | When the instrument is powered on, the instrument will initialize some settings and **[On/Off]** state. | |
| | Last | When the instrument is powered on, the instrument will remain the same settings and **[On/Off]** state as last time you turned off the instrument. | |
| | Last+Off | When the instrument is powered on, the instrument will remain the same settings as last time you turned off the instrument, but the **[On/Off]** is OFF state. | |
| Sense | Set the sense function state. | | |
| | Off | Turn the sense function off. | |
| | On | Turn the sense function on. | |
| ListTrig Source | Set the trigger method for the List files running. | | |
| | Immediate | Trigger immediately | |
| | Manual | Manual trigger | |
| | Bus | Bus trigger | |
| | External | External trigger | |
| DLogTrig Source | Set the trigger method for the data logging. | | |
| | Immediate | Trigger immediately | |
| | Manual | Manual trigger | |
| | Bus | Bus trigger | |
| | Voltage | Voltage trigger | |
| | Current | Current trigger | |
| | External | External trigger | |
| I/O | Set the communication information between instrument and PC. | | |
| | USB | USB communication interface | |
| | | TMC | USB-TMC protocol |
| | | VCP | Virtual serial port |
| | | | Display as the following format:<br>baud rate_data bit_parity bit_stop bit.<br>• Baud rate: 9600<br>• Data bit: 8 |

| | | | | |
|---|---|---|---|---|
| | | | • Parity bit: N<br>• Stop bit: 1 | |
| | | LAN | Virtual LAN communication. After selecting this option, you also need to set the communication parameters of the LAN, and the menu items are the same as those in the LAN menu (see below). | |
| | LAN | LAN communication interface | | |
| | | Info | View the LAN information. | |
| | | | LAN Status: Down<br>IP Mode: Auto<br>IP: 0.0.0.0<br>Mask: 0.0.0.0<br>Gateway: 0.0.0.0<br>DNS1: 0.0.0.0<br>DNS2: 0.0.0.0<br>MAC: 8C:C8:F4:40:01:E1<br>MDNS Status:<br>HostName:<br>HostDesc:<br>Domain:<br>TCPIP:INSTR<br>Socket Port: 30000 | |
| | | IP-Conf | Configure LAN IP information. | |
| | | | IP-Mode | Configure LAN IP mode. |
| | | | | Auto: automatically configure the address of the instrument. |
| | | | | Manual: manually configure the address of the instrument.<br>• IP: 0.0.0.0<br>Set the IP address.<br>• Mask: 0.0.0.0<br>Set the subnet mask.<br>• Gateway: 0.0.0.0<br>Set the gateway address.<br>• DNS1: 0.0.0.0<br>Set the preferred address of the DNS server. If it is not involved, there is no need to set it.<br>• DNS2: 0.0.0.0<br>Set the DNS server alternate address. If it is not involved, there is no need to set it. |

| | | | | |
|---|---|---|---|---|
| | | | | • Socket Port: 30000<br>Set the port number. |
| | | | Serv-Conf | Configure the LAN services. |
| | | | | MDNS: MDNS service state.<br>• On<br>• Off |
| | | | | PING: PING service state.<br>• On<br>• Off |
| | | | | Telnet-scpi: telnet-scpi service state.<br>• On<br>• Off |
| | | | | Web: Web service state.<br>• On<br>• Off |
| | | | | VX-11: VX-11 service state.<br>• On<br>• Off |
| | | | | Raw-socket: Raw-socket service state.<br>• On<br>• Off |
| | | Restore | Select whether to reset the LAN to the default settings or not.<br>• NO<br>• YES | |
| | | Reset | Select whether to confirm the LAN setting or not.<br>• NO<br>• YES | |
| | CAN | CAN communication interface. | | |
| | | Baudrate | Select the baud rate from the following options: 5k/10k/20k/40k/50k/80k/100k/125k/200k/250k/400k/500k/600k/800k/1000k. | |
| | | Address | Set the instrument address to a number from 0 to 127. | |
| | | Protocol | • Canfestival: Use standard can protocol. | |

| | | | |
|---|---|---|---|
| | | | • BMS: Use the protocol for docking with the BMS system. |
| Display RS232 or GPIB according to optional interface. In addition, RS232 interface and the analog interface share an interface position. | RS232 | Select RS-232 communication interface. | |
| | | Baudrate | Baud rate: 4800/9600/19200/38400/57600/115200 |
| | | Databit | Data bit: 5/6/7/8 |
| | | Parity | Parity bit: N (No parity) / E (Even parity) / O (Odd parity) |
| | | Stopbit | Stop bit: 1/2 |
| | GPIB | Select GPIB communication interface. | |
| | | Address | Set the communication address (1 to 30). |
| Parallel | Set the instruments to parallel operation mode. | | |
| | Single | Set the instrument to single mode, i.e., disable the parallel operation mode. | |
| | Master | Set the instrument to master mode. | |
| | | Total Unit | Number of parallel instruments. |
| | Slave | Set the instrument to slave mode. | |
| Digital Port | Set Digital I/O<br>By default, the menu item displays 7 options. You can set parameters for each option respectively. After setting, the corresponding change to each option becomes valid immediately. When re-entering **DigPort**, the interface can display the changed option. For detailed introduction of menus and functions, see 5.11 Digital I/O Function (Digital Port). | | |
| | IO-1. Ps-Clear, Not-Invert | Function setting of pin 1 | |
| | IO-2. Ps, Not-Invert | Function setting of pin 2 | |
| | IO-3. Off-Status, Not-Invert | Function setting of pin 3 | |
| | IO-4. Ext-Trig, Not-Invert | Function setting of pin 4 | |
| | IO-5. INH-Living, Not-Invert | Function setting of pin 5 | |
| | IO-6. Sync-On, Not-Invert | Function setting of pin 6 | |
| | IO-7. Sync-Off, Not-Invert | Function setting of pin 7 | |
| Ext-Program | External Analog Function. This function is optional. The menu can only display when corresponding board card is inserted. For details, see 5.12 Analogue Function (Ext-Program) (Optional). | | |
| System Reset | Select whether to restore the factory default settings or not. | | |

| | | |
|---|---|---|
| System Info | View the system information. For details, see 5.13 View the System Information (System Info). | |
| AC-Meter | Observe power grid information. | |
| | Display | Display the current regenerative power value. |
| | Clear | Clear the total current regenerative power value. |
| Disp on timer | Screen displays loading time. | |
| | On | Turn the display on. |
| | Off | Turn the display off. |

# 1.9 Options Introduction

This series instrument supports the following types of optional accessories (sold separately), the details are as below:

- **Optional interface card**
  - IT-E176: Interface card for GPIB communication. When users need to use GPIB communication, they can choose to purchase this accessory.

    For details, see 2.5.4 GPIB Interface (Optional).
  - IT-E177: Interface card that includes RS-232 communication interface, external analog and other functions.

    The accessory has a total of 10 pins, and the details of each pin are as follows:

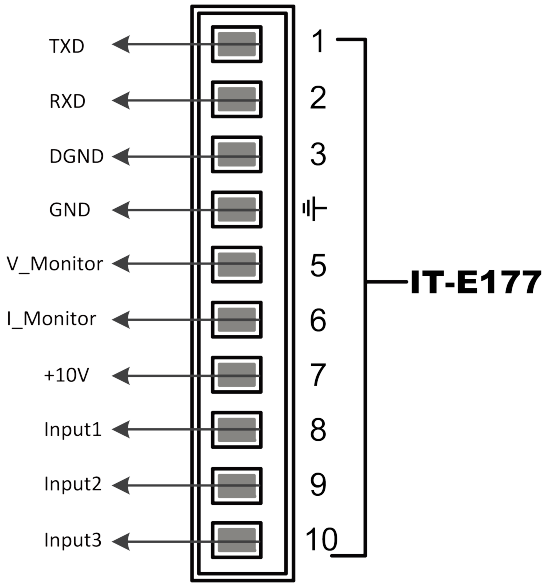

| Pins | Description |
|---|---|
| 1 | RS-232 TXD pin for transmitting data. |
| 2 | RS-232 RXD pin for receiving data. |
| 3 | RS-232 DGND pin for grounding. |
| 4 | Ground terminal, that is, the negative terminal of pin 5 to pin 10. |
| 5 | Voltage monitoring terminal. It can output a voltage of 0 to 10V to monitor the input voltage from 0 to full scale. |
| 6 | Current monitoring terminal.<br>It can output a voltage of 0 to 10V to monitor the output current from 0 to full scale input current. |
| 7 | Reference voltage (10V) test terminal. The accuracy is 0.03%. You can use a multimeter to measure this pin. When the output voltage of the pin is in the range of 10±0.03%*10, it indicates that the accessory is functioning normally. Otherwise, the function is abnormal and cannot be used. |
| 8 / 9 / 10 | Terminals for external analog function. For details, see 5.12 Analogue Function (Ext-Program) (Optional). |

- **Fiber optic modules and cables**

  Fiber optic modules and cables are used for data transmission and communication between parallel units, and are highly resistant to interference. The fiber optic module and cable are the necessary accessories for the parallel connection. Different numbers of fiber optic modules and cables are used in different numbers of parallels.

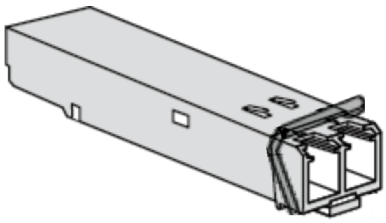

  IT-E168: Used for parallel connection between the units, including one fiber module and two fiber cables, with lengths of 1.5 meters and 0.3 meters.

- IT-E165A: Anti-reverse connection and anti-spark module

  It is suitable for battery products. This module can be selected to avoid sparking and reverse connection during battery wiring.

# 2 Inspection and Installation


- Verifying the Shipment
- Instrument Size Introduction
- Connecting the Power Cord
- Connecting the Device Under Test (DUT)
- Remote Interface Connection


## 2.1 Verifying the Shipment

Unpack the box and check the contents before operating the instrument. If wrong items have been delivered, if items are missing, or if there is a defect with the appearance of the items, contact the dealer from which you purchased the instrument immediately.

The package contents include:

| Item | Qty. | Model | Remarks |
|---|---|---|---|
| Regenerative DC Electronic Load | x1 | IT-M3800 Series | For the specific models included in this series, refer to 1.1 Brief Introduction. |
| Power cord | x1 | - | Depending on the instrument model.<br>For details, see 2.3 Connecting the Power Cord. |
| USB communication cable | x1 | - | This accessory is selected when the USB interface is used for starting up remote operation. |

Copyright © Itech Electronic Co., Ltd.

| Item | Qty. | Model | Remarks |
|---|---|---|---|
| Ex-factory Test Report | x1 | - | It contains the test report and calibration report of the instrument before delivery. |
| Communication card (optional) | *X* | IT-E176/IT-E177 | IT-E176 (GPIB communication card) and IT-E177 (Analog/RS232 communication card) are non-standard accessories. The actual delivery quantity is subject to the user's order. |

**Note**

Upon verification of the shipment, keep the package and relevant contents thereof in a safe place. When returning the instrument for warranty service or repair, the specified packing requirements shall be met.

## 2.2 Instrument Size Introduction

The instrument should be installed at well-ventilated and rational-sized space. Please select appropriate space for installation based on the instrument size.

The detailed dimension drawings of this series instrument are as follows (unit: mm, deviation: ±1 mm):

## 1U Models

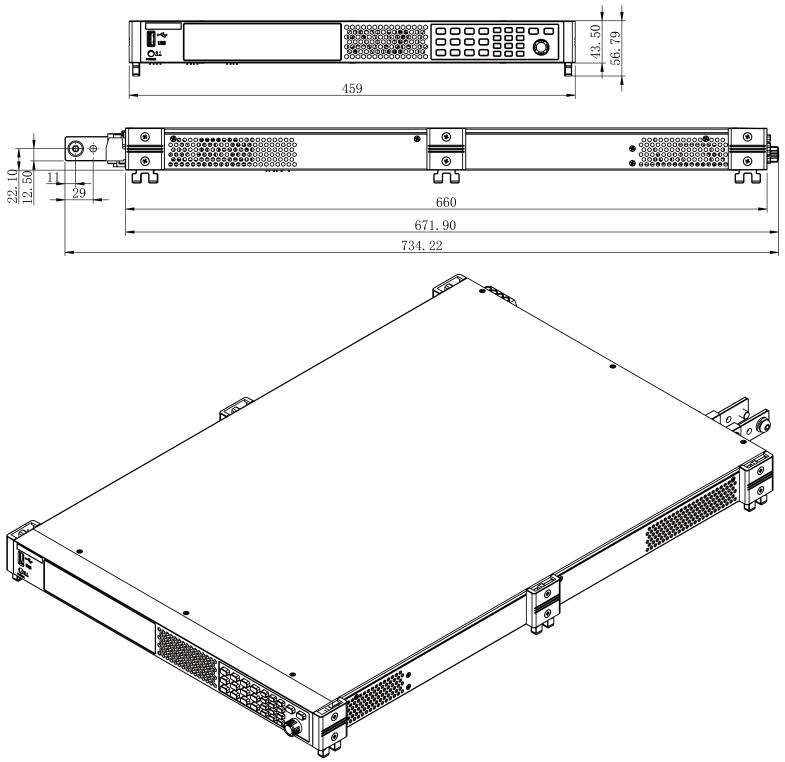

**2U Models**

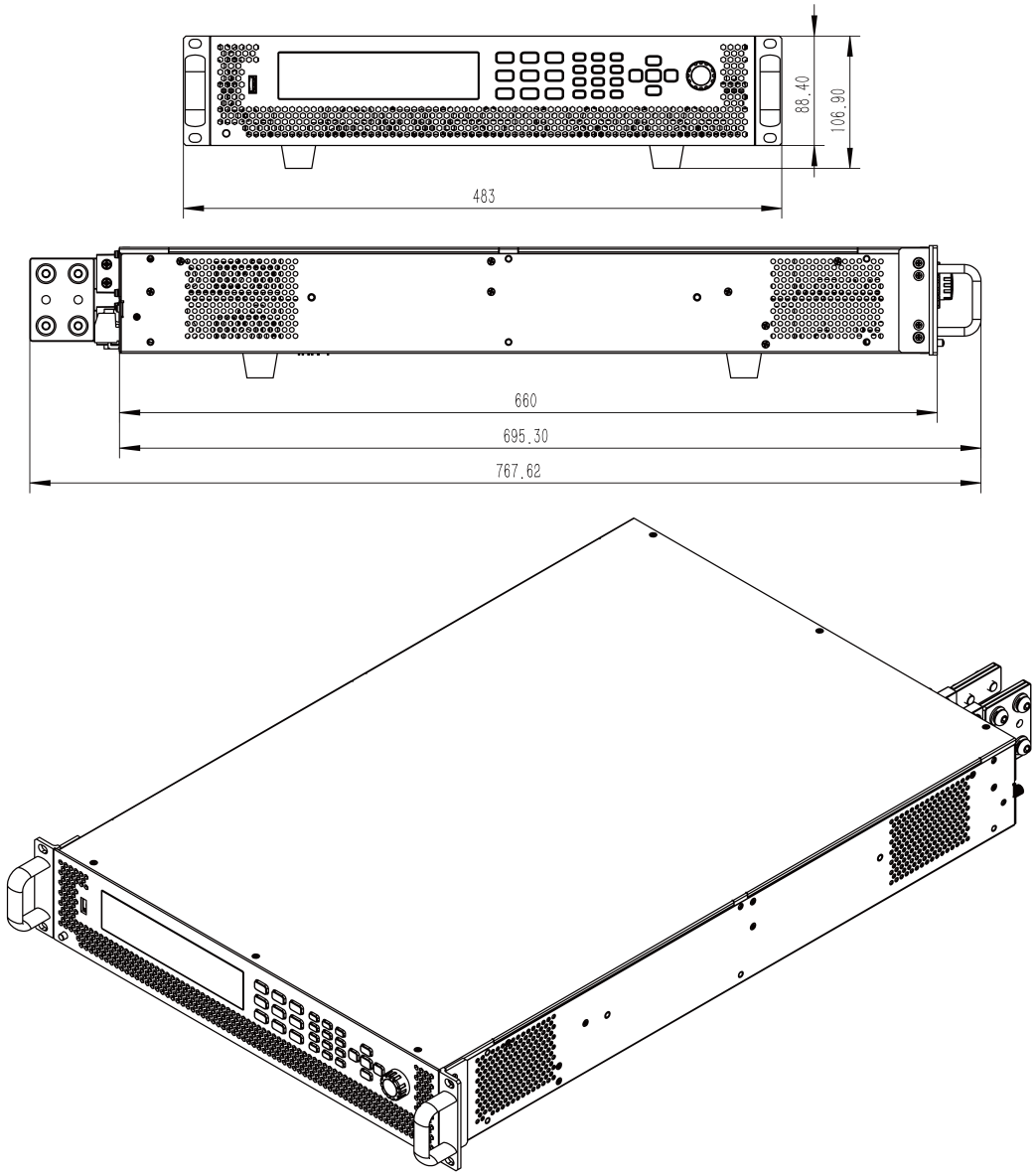


# 2.3 Connecting the Power Cord

## Precautions

To prevent electric shock and damage to the instrument, observe the following precautions.

**WARNING**

- **Before connecting power cord, be sure to confirm that the power voltage matches with the rated input voltage of the instrument.**
- **Before connecting power cord, be sure to switch off the instrument. Verify that there is no dangerous voltage on the connection terminals.**
- **To avoid fire or electric shock, make sure to use the power cord supplied by ITECH.**
- **Be sure to connect the power cord to the AC distribution box with protective grounding. Do not use terminal board without protective grounding.**
- **Do not use an extended power cord without protective grounding, otherwise the protection function will fail.**
- **Be sure to perform related operations and connections to feed energy back to grid in accordance with related regulations, and meet all necessary conditions.**
- **Ensure that the power cord connection terminals are either insulated or covered by the supplied protective cover so that no accidental contact with lethal voltage can occur.**

**CAUTION**

**Safety agency requirements dictate that there must be a way to physically disconnect the AC mains cable from the unit. A disconnect device, either a switch or circuit breaker must be provided in the final installation. The disconnect device must be close to the equipment, be easily accessible, and be marked as the disconnect device for this equipment.**

## Categories of Power Cords

The standard power cord specifications for this series instruments are divided into the following types according to different regions:

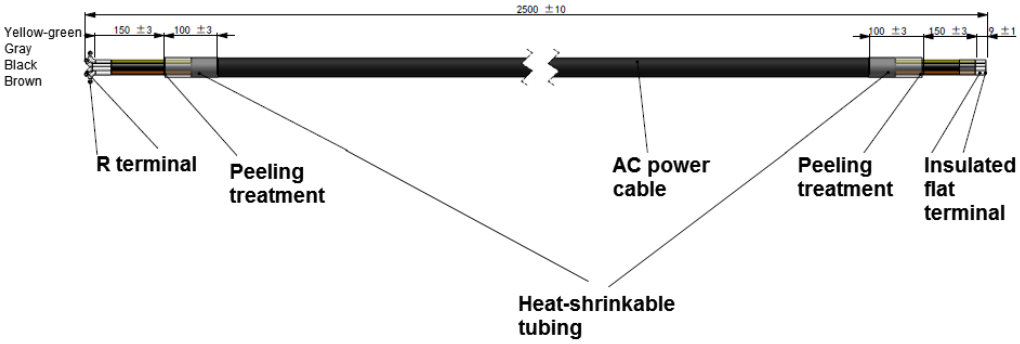


The yellow-green wire is grounding wire, which is connected to the PE terminal of power input on the rear panel; the others are live wires, which are correspondingly connected to the L1, L2 and L3 terminals of power input on the rear panel of the instrument.

## AC Power Input Level

The input of this series instruments is single-phase or three-phase, and the voltage level and frequency are as follows.

- Single-phase(L/N or L/L): 85V ~ 520V, frequency: 50Hz/60Hz.
- Three-phase(L1/L2/L3): 110V ~ 520V, frequency: 50Hz/60Hz.

The power setting value of this series instruments will be derated when inputting low-grade voltage. The derating characteristics are detailed in the following table. And different model of rated AC current is different, the detailed specification refer to the technical specification.

| **Output Power Derating Characteristics with AC Input Voltage** | | | | | |
|---|---|---|---|---|---|
| Rated Output Power | 1-Phase Low Input Range | 1-Phase High Input Range | 1-Phase High Input Range | 3-Phase | 3-Phase |
| | 90 -145 VAC | 180-200 VAC | 200-264 VAC | 180-264 VAC | 342-520 VAC |
| 1.7kW | 1kW | 1.7kW | 1.7kW | 1.7kW | 1.7kW |
| 3.4kW | 1kW | 2kW | 2.3kW | 3.4kW | 3.4kW |
| 5.1kW | 1kW | 2kW | 2.3kW | 3.5kW | 5.1kW |
| 10.2kW | 2kW | 4kW | 4.6kW | 7.1kW | 10.2kW |
| 2kW | 1kW | 2kW | 2kW | 2kW | 2kW |
| 4kW | 1kW | 2kW | 2.3kW | 3.5kW | 4kW |

| Output Power Derating Characteristics with AC Input Voltage | | | | | |
|---|---|---|---|---|---|
| 6kW | 1kW | 2kW | 2.3kW | 3.5kW | 6kW |
| 12kW | 2kW | 4kW | 4.6kW | 7.1kW | 12kW |

## Connecting the Power Cord

**Suggestions for phase assignment:**

- When a single instrument is connected to the two phases of the three-phase power supply terminal, please take care for balanced current distribution on three phases. In case multiple units are connected to the same main AC distribution box. It is recommended to follow the suggestion connection diagram as below.

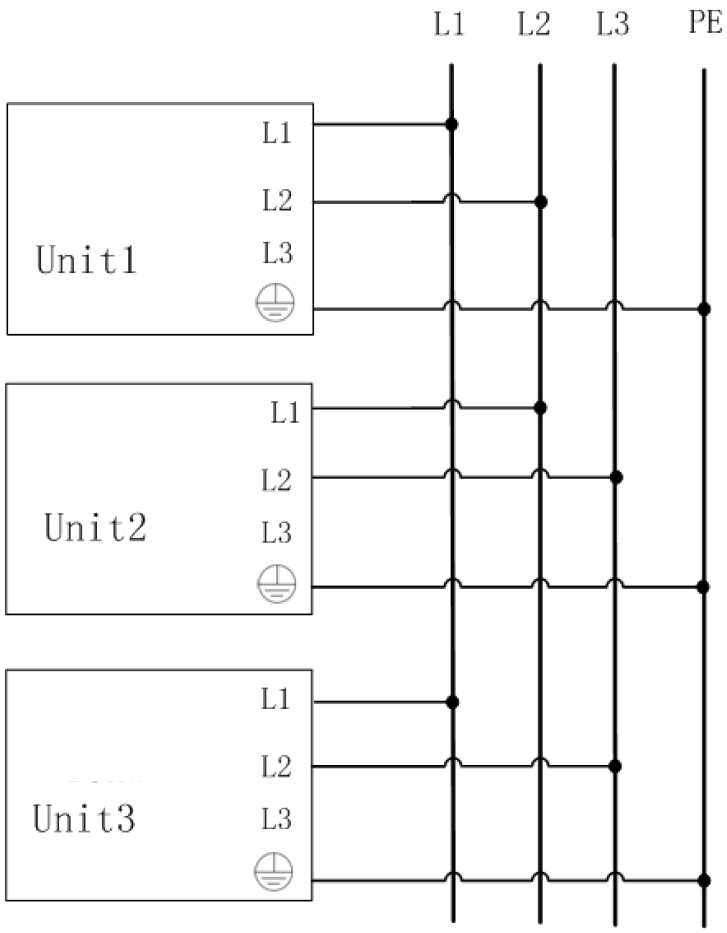


- When the instrument is connected to the three phases of the three-phase power supply terminal, there is no need to pay attention to the current sharing problem, just connect it directly. The wiring diagram is as follows:

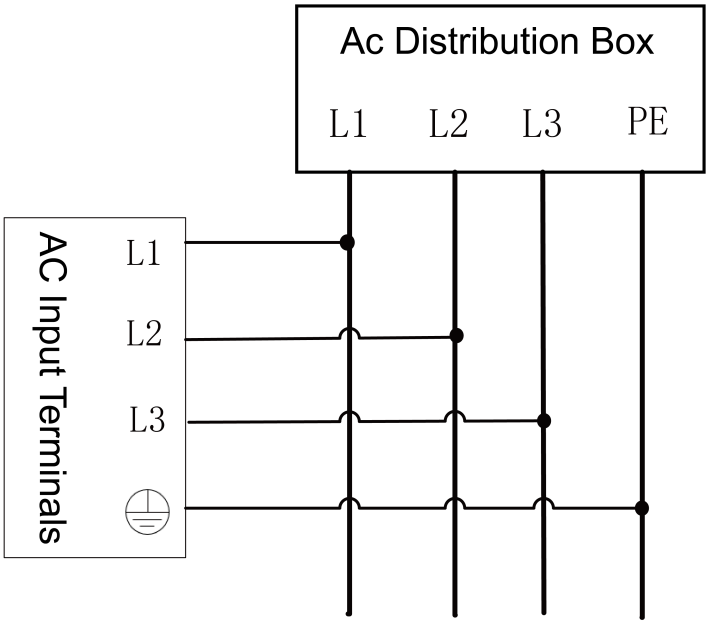


- When the instrument is connected to single-phase power (L/N), the wiring diagram is shown below.

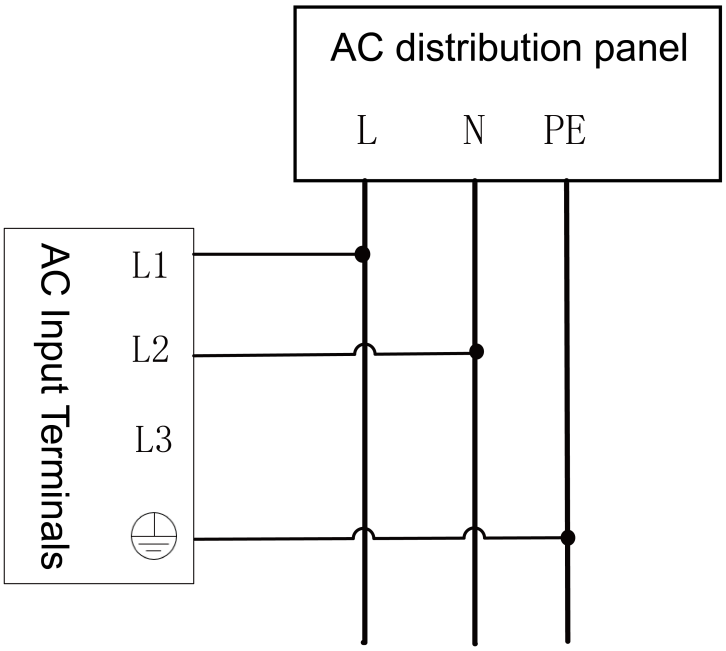


**Operation procedures:**

- For 1U/2U model, see the steps below to connect the power cable.
  1. Confirm that the switch of the AC power distribution box is off.
  2. Confirm that the power switch is in the OFF position and verify that there is no dangerous voltage on the connection terminals.
  3. Remove the protective cover outside the AC input terminal on the rear panel.

4. Connect one end of the power cable's round terminal to the AC power input terminal on the instrument's rear panel.
   a. You only need to connect the red/green/yellow (or brown/black/gray) live wires to the terminals on the rear panel, which are not required to correspond to L1, L2 and L3 terminals one by one.
   b. The yellow-green wire is grounding wire, which is connected to the protective grounding terminal (PE).
5. Mount the protective cover back to its original position.
6. Refer to the suggestion connection diagram, connect the other end of the power cable to the required AC distribution box.

# 2.4 Connecting the Device Under Test (DUT)

This section describes how to connect the test cables between the instrument and DUT.

### Precautions

To prevent electric shock and damage to the instrument, observe the following precautions.

WARNING

- **Before connecting test cables, be sure to switch off the instrument.**
- **To avoid electrical shock, before testing, please make sure the rating values of the testing cables, and do not measure the current that higher than the rating value. All test cables shall be capable of withstanding the maximum short circuit current of the instrument without causing overheat.**
- **Do not short the battery when connecting or disconnecting the battery testing circuit. Short circuit may cause severe accident.**
- **Because the instrument can be used to sink current, hazardous voltages from an external energy source such as a battery may be present on the input terminals even with the instrument power off. Provision must be made to disconnect the external energy source before touching the input or sense terminals.**
- **Always use test cables provided by ITECH to connect the equipment. If test cables from other factories are used, please confirm the maximum current that the test cables can withstand.**
- **During wiring, check that the positive and negative poles of the test cables are properly and tightly connected. Do not connect the positive pole and disconnect the negative pole.**
- **Ensure that the input terminals are either insulated or covered using the safety covers provided, so that no accidental contact with lethal voltages can occur.**

## Specification for Test Cables

Test cables are not standard accessories for the instrument. Please select optional red and black test cables for individual sales based on the maximum current value. For specifications of test cables and maximum current values, refer to A.1 **Appendix→Specifications of Red and Black Test Lines**.

## Connecting the DUT (Local Measurement)

The instrument supports two kinds of wiring methods with the DUT: local measurement and remote measurement (SENSE). The default test mode is local measurement.

The connection diagram and steps of local measurement are as follows:

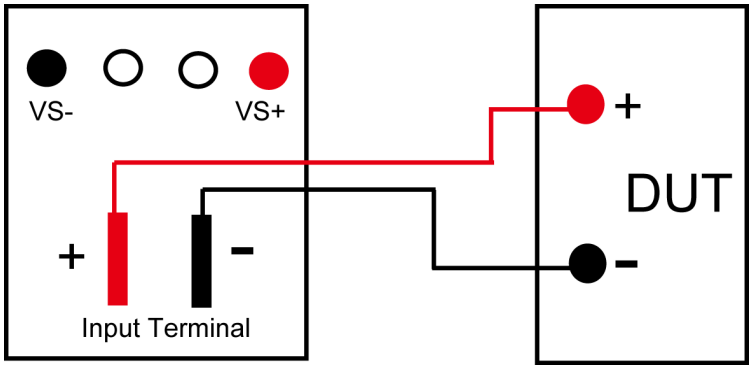


1. Confirm that the power switch is in the OFF position and verify that there is no dangerous voltage on the connection terminals.
2. Remove the input terminals cover of the load.
3. Loosen the screws of the input terminals and connect the red and black test cables to the input terminals. Re-tighten the screws.

   When maximum current that one test cable can withstand fails to meet the rated current, use multiple pieces of red and black test cables. For example, the maximum current is 1,200A, then 4 pieces of 360A red and black cables are required.
4. Thread the red and black test cables through the input terminals cover of the load and install the cover.
5. (Optional) According to the actual situation of DUT, connect the grounding terminal on the rear panel of the instrument to the DUT to ensure the safe grounding.

   For the location information, see 1.5 Rear Panel Introduction.
6. Connect the other end of the red and black cables to the DUT. The positive and negative poles must be properly connected and fastened when wiring.

## Connecting the DUT (Remote Sensing)

Remote measurement is available for the following scenarios:

When the DUT consumes large current or the wires are too long, there is a voltage drop on the wires between DUT and input terminals of the load. To maximize measurement accuracy, the load provides the remote measurement terminals VS+ and VS- on the rear panel, which can be used to measure the terminal voltage of the DUT.

When the load is used for battery testing in actual applications, the voltage drop of the wire will lead to voltage inconsistency of both ends and inconsistency of the cutoff voltage of load and the actual voltage of battery, resulting in inaccurate measurement.

The connection diagram and steps of remote measurement are as follows:

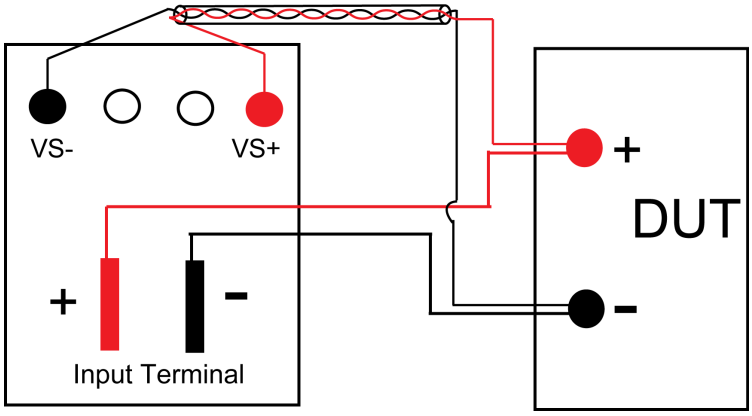


1. Confirm that the power switch is in the OFF position and verify that there is no dangerous voltage on the connection terminals.
2. Refer to the wiring diagram and connect the Vs+ and Vs- with armored twisted-pair cables.

**Note**

To ensure the stability of the system, use armored twisted-pair cables between the remote sense terminals and the DUT. Pay attention to the positive and negative poles when wiring, otherwise it will damage the instrument.

3. Remove the input terminals cover of the load.
4. Loosen the screws of the input terminals and connect the red and black test cables to the input terminals. Re-tighten the screws.

   When maximum current that one test cable can withstand fails to meet the rated current, use multiple pieces of red and black test cables. For example, the maximum current is 1,200A, then 4 pieces of 360A red and black cables are required.
5. Thread the red and black test cables through the input terminals cover of the load and install the cover.
6. (Optional) According to the actual situation of DUT, connect the grounding terminal on the rear panel of the instrument to the DUT to ensure the safe grounding.

   For the location information, see 1.5 Rear Panel Introduction.
7. Connect the other end of the remote sense cables to the DUT.
8. Connect the other end of the red and black cables to the DUT. The positive and negative poles must be properly connected and fastened when wiring.
9. Power on the instrument and turn on the Sense function of the instrument.

   For details, see 5.7 Sense Function (Sense).

**WARNING**

**Never touch cables or connections immediately after turning off the instrument at the end of the test. Lethal voltages may remain at the input terminals after turn-off. Verify that there is no dangerous voltage on the input or sense terminals before touching them.**

# 2.5 Remote Interface Connection

This series load comes standard with four communication interfaces: USB, LAN and CAN, and supports two optional communication interfaces: GPIB, RS-232. You can choose one of them to communicate with your computer.

Note

When you use the remote interface to send SCPI instructions, if you use the programming commands that involve modifying the instrument settings, such as modifying the input voltage value, after completing the communication connection between the instrument and the host computer, and after the communication settings are completed, you must execute the **SYST:REM** command firstly.

## 2.5.1 USB Interface

The USB interface is located on the rear panel of the instrument. You can connect the instrument to the computer via a cable with a USB interface on both ends (USB A-type connector on one end and USB B-type connector on the other).

The user needs to select the USB interface type in the System menu before using the USB interface. The following types are optional.

- TMC: USB_TMC interface;
- VCP: Virtual serial port. For Win7 system, you can download IT-M3900 VCP driver from ITECH official website or contact technical support engineer; for Win10 system, you do not need to install VCP driver.

The operation steps to change the USB interface type in System Menu are as follows.

1. Press the composite keys **[Shift]+[P-set]** (System) on the front panel to enter the system menu.
2. Rotate the knob to select **I/O** and press **[Enter]**.
3. Rotate the knob or press the Left/Right key to select **USB**, and press **[Enter]**.
4. Rotate the knob or press the Left/Right key to select the communication method.

   Note

   If you select **VCP**, you also need to set the baud rate and other parameters of the virtual serial port, and the baud rate must be the same as the configuration on the computer side.

## 2.5.2 LAN Interface

When the user connect PC through LAN interface, the following is required to use the LAN interface. The LAN interface complies with the LXI standard.

### Connect Interface

Use the following steps to quickly connect your instrument to your LAN and configure it. Two typical LAN interface systems are described below: private LAN and site LAN.

- **Connect to the private LAN**

  A private LAN is a network in which LAN-enabled instruments and computers are directly connected. They are typically small, with no centrally-managed resources. When connected to a computer, a standard network cable can be used to connect directly to the computer via the LAN interface.

- **Connect to the site LAN**

  A site LAN is a local area network in which LAN-enabled instruments and computers are connected to the network through routers, hubs, and/or switches. They are typically large, centrally-managed networks with services such as DHCP and DNS servers. When connected to a computer, a network cable can be used to connect to the router, and the computer is also connected to the router.

Note

- When using one crossover cable to connect PC directly, the gateway address of the instrument should be consistent with that of the PC, and the IP address should be at the same network segment with the PC's IP address.
- When the instrument and computer are connected to the router, an independent IP address must be assigned for the instrument.

### View LAN Interface Information

The operation steps to view the LAN interface information in the System Menu are as follows.

1. Press the composite keys **[Shift]+[P-set]** (System) on the front panel to enter the system menu.
2. Rotate the knob to select **I/O** and press **[Enter]**.
3. Press the Left/Right key to select **LAN** and press **[Enter]**.
4. Press the Left/Right key to select **Info** and press **[Enter]**.
5. Rotate the knob to view the LAN parameters. See the information in 1.8 System Menu Function for details.

## Configure LAN Interface Information

The configurable parameters of this series load are described as follows.

**IP-Conf**

- IP: This value is the Internet Protocol (IP) address of the instrument. An IP address is required for all IP and TCP/IP communications with the instrument. An IP Address consists of 4 decimal numbers separated by periods. Each decimal number ranges from 0 through 255 with no leading zeros (for example, 169.254.2.20).
- Mask: This value is used to enable the instrument to determine if a client IP address is on the same local subnet. The same numbering notation applies as for the IP Address. When a client IP address is on a different subnet, all packets must be sent to the Default Gateway.
- Gateway: This value is the IP Address of the default gateway that allows the instrument to communicate with systems that are not on the local subnet, as determined by the subnet mask setting. The same numbering notation applies as for the IP Address. A value of 0.0.0.0 indicates that no default gateway is defined.
- DNS1: This field enters the primary address of the server. Contact your LAN administrator for server details. The same numbering notation applies as for the IP Address. A value of 0.0.0.0 indicates that no default server is defined.

  DNS is an internet service that translates domain names into IP addresses. It is also needed for the instrument to find and display its hostname assigned by the network. Normally, DHCP discovers the DNS address information; you only need to change this if DHCP is unused or not functional.
- DNS2: This field enters the secondary address of the server. Contact your LAN administrator for server details. The same numbering notation applies as for the IP Address. A value of 0.0.0.0 indicates that no default server is defined.
- Socket Port: This value indicates the port number corresponding to the service.

**Serv-Conf**

Configurable services include: MDNS, PING, Telnet-scpi, Web, VXI-11, and Raw Socket.

**How to Configure**

- **IP-Conf**

  Take manual configuration as an example. The steps are as follows:

1. Press the composite keys **[Shift]+[P-set]** (System) on the front panel to enter the system menu.
2. Rotate the knob to select **I/O** and press **[Enter]**.
3. Press the Left/Right key to select **LAN** and press **[Enter]**.
4. Press the Left/Right key to select **IP-Conf** and press **[Enter]**.
5. Press the Left/Right key to select **Manual** and press **[Enter]**.
6. Set the **IP**, **Mask** and the other parameters in turns, and press **[Enter]**.

   After the last parameter **Socket Port** is set, the system will return to the LAN setting interface shown as below:

   ```
   SYSTEM   I/O CONF   LAN
   Info  IP-Conf  Serv-Conf  Reset
   ```

7. Press the Left/Right key to select **Reset** to confirm the settings of IP-Conf.

- **Serv-Conf**

1. Press the composite keys **[Shift]+[P-set]** (System) on the front panel to enter the system menu.
2. Rotate the knob to select **I/O** and press **[Enter]**.
3. Press the Left/Right key to select **LAN** and press **[Enter]**.
4. Press the Left/Right key to select **Serv-Conf** and press **[Enter]**.
5. Rotate the knob to select the service you want to enable and press **[Enter]**.
6. Rotate the knob to select whether to enable the service and press **[Enter]**.
   - On: Indicates that the service is enabled.
   - Off: Indicates that the service is disabled.

### 2.5.2.1 Using Web Server

The instrument has a built-in Web server for monitoring and controlling the instrument via a Web browser in PC. To use the Web server, connect the instrument and PC over LAN interface and enter the instrument's IP address into the address bar at the top of your PC's Web browser, you can access the front panel control functions including the LAN configuration parameters.

**Note**

- If you want to remotely control the instrument using the built-in web server, you must enable the web service. See 2.5.2 LAN Interface for details.
- The format of the address entered in the address bar of the browser is **http://*192.168.0.100***. The specific IP address is subject to the actual instrument settings.

The opened page is displayed as follows:

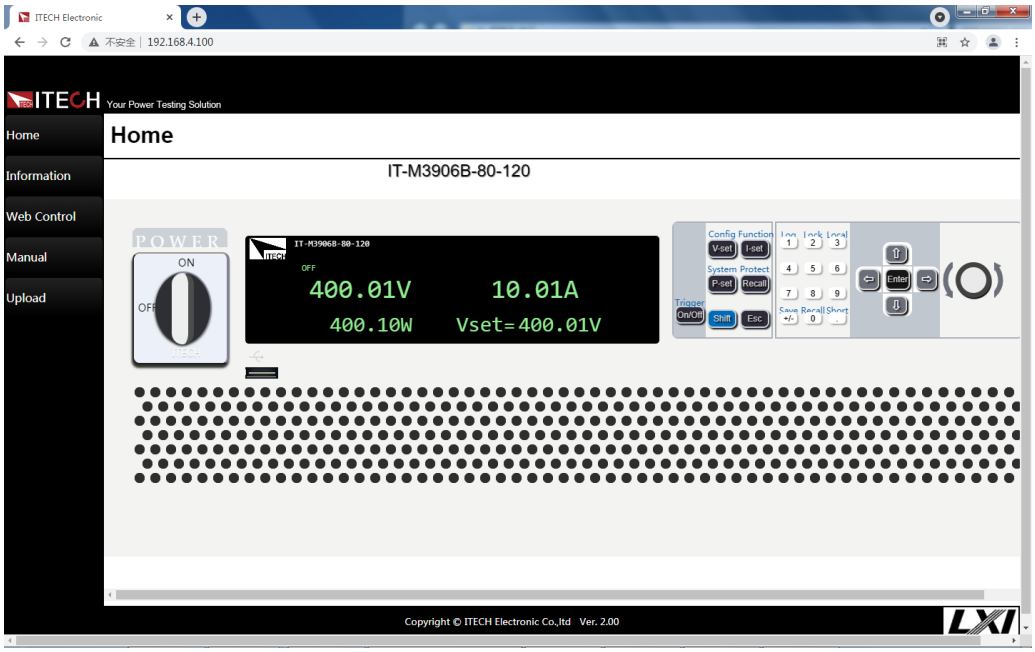


**Note**

The homepage of different models are different. The actual shown page shall be subject to the connected instrument.

You can select different pages by clicking the buttons shown in the navigation bar on the left side of the window. The detailed descriptions are as follows.

- Home：Web home interface, displays the model and appearance of the instrument;
- Information: Displays the serial number of the instrument and more system information as well as LAN configuration parameters;
- Web Control: Enables the Web control to begin controlling the instrument. This page allows you to monitor and control the instrument;
- LAN Configuration: Reconfigure the LAN parameters;
- Manual: Go to the ITECH official website and view or download the relevant documents.
- Upload: Performs a system upgrade.

Click **CONNECT** to connect the PC with the instrument, then click **Select File** to select the system upgrade installation package (for example, `itech_3900_P.itech`), and then click **UPLOAD** performs the upgrade operation. After the upgrade is complete, the instrument needs to be restarted.

### 2.5.2.2 Using Telnet

The Telnet utility (as well as sockets), is another way to communicate with the instrument without using I/O libraries or drivers. In all cases, you must first establish a LAN connection from your computer to the instrument as previously described.

In an MS-DOS Command Prompt box, type “telnet hostname” where hostname is the instrument’s hostname or IP address. Press the Enter key and you should get a Telnet session box with a title indicating that you are connected to the instrument and 23 is the instrument’s telnet port. Type the SCPI commands at the prompt.

### 2.5.2.3 Using Sockets

CAUTION

- **Before using this function, you need to configure Socket Port, and the configuration on the instrument side should be consistent with the configuration on the PC side.**
- **The instruments allow any combination of up to six simultaneous socket and telnet connections to be made.**

ITECH instruments have SCPI socket services, which can be used to send and receive SCPI commands, queries, and query responses. All commands must be terminated with a newline for the message to be parsed. All query responses will also be terminated with a newline.

## 2.5.3 CAN Interface

The CAN interface is located on the rear panel of the instrument and is connected to the computer using a CAN communication cable.

#### Definition of CAN Pins

The definition of CAN pins are as follows.

| Pins | Description |
|---|---|
| H | CAN_H |
| L | CAN_L |
| GND | CAN_GND |

## CAN Configuration

The user needs to configure the CAN interface parameters in the system menu before using the remote control. The CAN interface parameters are as follows.

| Name | Description |
|---|---|
| Address | Range: 0 – 127 |
| Baud rate | Select the baud rate from the following options: 5k/10k/20k/40k/50k/80k/100k/125k/200k/250k/400k/500k/600k/800k/1000k |
| Protocol | • DeviceNet: Use standard can protocol.<br>• BMS: Use the protocol for docking with the BMS system. |

The operation steps are as follows.

1. Press the composite keys **[Shift]+[P-set]** (System) on the front panel to enter the system menu.
2. Rotate the knob to select **I/O** and press **[Enter]**.
3. Press the Left/Right key to select **CAN** and press **[Enter]**.
4. Set the baud rate, address and other parameters, press **[Enter]**.

## CAN Troubleshooting

If you meet some problems when communicating with PC by CAN interface, please check the following items:

- PC and the instrument must have the same baud rate.
- Ensure you have used the correct communication cable (CAN_H, CAN_L). Please pay attention that some cable may not have a correct internal wiring even it is with an appropriate plug.
- The interface cable is correctly connected (CAN_H to CAN_H, CAN_L to CAN_L).

- If the communication signal is poor or unstable, it is recommended to connect a 120 Ω terminating resistance.
  - The connection diagram of a single device is as below.

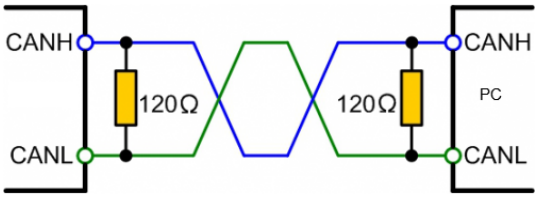


  - The connection diagram of multiple devices is as below.

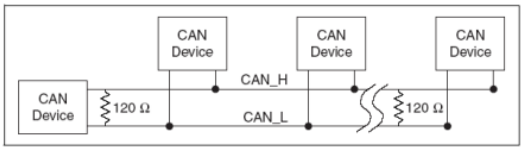


**Note**

When multiple devices are connected, it is recommended to connect the pin 8 (GND) of the P-IO terminal on the rear panel of these devices in parallel, and the communication quality will be improved in the entire CAN network.

## 2.5.4 GPIB Interface (Optional)

The GPIB (IEEE-488) interface is assembled in the IT-E176 communication board. Use a GPIB cable to connect GPIB interfaces of the instrument and PC. Please ensure that the screws have been screwed down in order to have a full connection.

### GPIB Configuration

Each device on the GPIB (IEEE-488) interface must have a unique whole number address between 1 and 30. Your computer's GPIB interface card address must not conflict with any instrument on the interface bus. This setting is nonvolatile; it will not be changed by *RST.

When you purchase the interface accessory and successfully insert it into the corresponding position on the rear panel of the instrument, the menu item for changing the GPIB address appears in the System menu. The specific steps are as follows:

1. Ensure that the instrument's power switch is off, that is, the instrument is in Power Off state.
2. Insert the separately purchased GPIB interface card into the card slot on the rear panel of the instrument.

3. Connect the instrument with the computer via the GPIB cable. After the connection is successful, turn on the power switch of the instrument.
4. Press the composite keys **[Shift]+[P-set]** (System) on the front panel to enter the system menu.
5. Rotate the knob to select **I/O** and press **[Enter]**.
6. Press the Left/Right key to select **GPIB** and press **[Enter]**.
7. Press the numeric keys to set the GPIB address and press **[Enter]**.

## 2.5.5 RS–232 Interface (Optional)

The RS-232 interface shares the same communication card (IT-E177) with the analog function.

### Definition of RS-232 Pins

The definition of RS-232 pins are as follows.

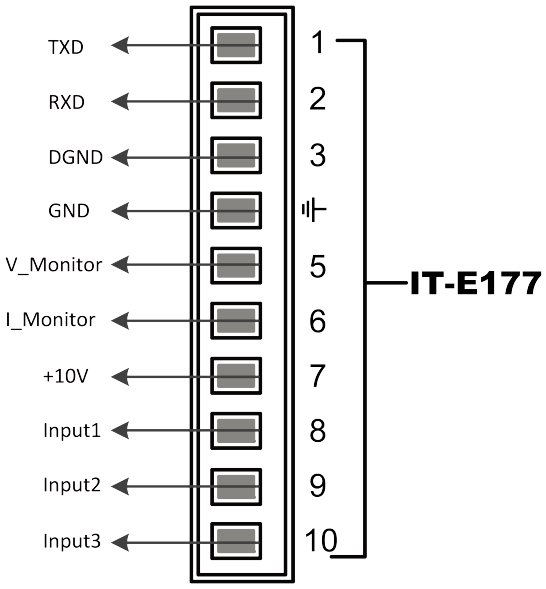


When using the RS-232 interface for communication, connect the pin 1, pin 2, and pin 3 of the IT-E177 to the PC. The pin description is as follows:

| Pins | Description |
|---|---|
| 1 | TXD, transmit data |
| 2 | RXD, receive data |
| 3 | DGND, ground |

## RS–232 Configuration

When you purchase the interface accessory and successfully insert it into the corresponding position on the rear panel of the instrument, the RS–232 menu item will appear in the System menu. The specific steps are as follows:

1. Ensure that the instrument's power switch is off, that is, the instrument is in Power Off state.
2. Insert the separately purchased RS–232 interface card into the card slot on the rear panel of the instrument.
3. Connect the instrument to the computer via an RS–232 cable. After the connection is successful, turn on the power switch of the instrument.
4. Press the composite keys **[Shift]+[P-set]** (System) on the front panel to enter the system menu.
5. Rotate the knob to select **I/O** and press **[Enter]**.
6. Press the Left/Right key to select **RS232** and press **[Enter]**.
7. Set the relevant communication parameters in turn, and press **[Enter]**.

   The RS–232 interface parameters are as follows.

| Name | Description |
|---|---|
| Baud rate | Select the baud rate from the following options: 4800/9600/19200/38400/57600/115200 |
| Data Bit | The options are: 5/6/7/8 |
| Parity bit | The options are: N (no parity), O (odd parity), E (even parity). |
| Stop bit | The options are: 1/2 |

## RS-232 Troubleshooting

If you meet some problems when communicating with PC by RS-232 interface, please check the following items:

- Check that whether the baud rate of the computer and instrument are the same;
- Make sure the correct cable and adapter are connected. Note that internal wiring may not be correct even if the cable has a suitable plug;
- The cable must be connected to the correct serial ports (COM1, COM2, etc) of PC.

# 3 Getting Started

♦ Power-on Self-Test
♦ Set Input Value
♦ Use the Front Panel Menu.
♦ On/Off Control

## 3.1 Power-on Self-Test

Before operation, please confirm that you have fully understood the safety instructions.

When you turn the POWER switch on for the first time after purchase, the instrument starts with its factory default settings. Each time thereafter, the instrument starts according to the setting that you selected as outlined in 5.6 Set the Power-on State (PowerOn).

## Precautions

WARNING

- **Before connecting power cord, be sure to confirm that the power voltage matches with the supply voltage.**
- **Before connecting power cord, be sure to switch off the instrument. Verify that there is no dangerous voltage on the terminals before touching them.**
- **To avoid fire or electric shock, make sure to use the power cord supplied by ITECH.**
- **Be sure to connect the main power socket to the power outlet with protective grounding. Do not use terminal board without protective grounding.**
- **Do not use an extended power cord without protective grounding, otherwise the protection function will fail.**
- **Be sure to perform related operations and connections to feed energy back to grid in accordance with related regulations, and meet all necessary conditions.**
- **Ensure that the input electrodes are either insulated or covered using the safety covers provided, so that no accidental contact with lethal voltages can occur.**
- **If you notice strange sounds, unusual odors, fire, or smoke around or from inside the instrument, flip the POWER switch to the (O) side to turn the instrument off, or remove the power cord plug from the outlet. The detachable power cord may be used as an emergency disconnecting device. Removing the power cord will disconnect AC input power to the unit.**

## Power Switch Introduction

The power switch is located in the lower left corner of the front panel. The power switch is a button, and pressing once indicates **ON** and pressing again indicates **OFF**.

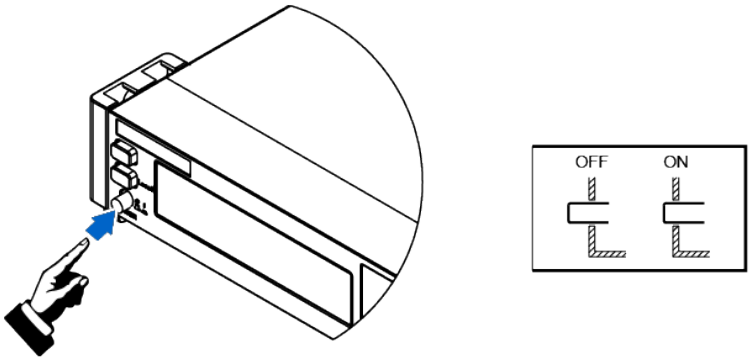


## Turning the POWER Switch On / Off

- Turning the POWER Switch On

  Check that the power cord is connected properly.

  Flip the POWER switch to the ( | ) side to turn the instrument on. The front panel display will light up after a few seconds. It may take about 30 seconds or so for the power supply to initialize before it is ready for use.

- Turning the POWER Switch Off

  Flip the POWER switch to the ( O ) side to turn the instrument off. After you turn the POWER switch off, wait at least 10 seconds after the fan stops before you turn the POWER switch back on. Turning the instrument on too soon after you turn it off can cause damage to the inrush current limiter circuit, as well as reduce the life of components such as the POWER switch and the internal input fuses.

## Self-Test Procedures

A successful self-test indicates that the purchased product meets delivery standards and it is available for normal usage. Normal self-test procedures:

1. Correctly connect the power cord and power on the instrument.

   The instrument starts the self-test.

2. After the instrument is self-tested normally, the VFD shows the initial working mode of the load (CC mode) and input voltage, current, power and other information.

If an error occurs during the self-test, an error message is displayed. The following table lists the error messages you might see.

| Error message | Error Description |
|---|---|
| Eeprom Failure | The EEPROM is damaged. |
| Main FrameInitializeLost | The system setting data is lost. |

| Error message | Error Description |
|---|---|
| Calibration Data Lost | The factory calibration data in EEPROM is lost. |
| Config Data Lost | The latest operation state of the instrument is lost. |
| NETWORKING… | The parallel operations are abnormal and cannot finish the networking. |
| FIBER MULTI MASTER | Multi-master conflict |
| FIBER EXT UNLOCK | The outer ring of the fiber is not locked. |

## Exception Handling

If the instrument cannot start normally, please check and take measures by reference to steps below.

1. Check whether the power cord is correctly connected and confirm whether the instrument is powered.
2. Check whether the power in On. The power switch is under “|” On status.
3. Check whether the power voltage matches with the supply voltage. Please refer to 2.3 Connecting the Power Cord to select proper AC input.
4. After multiple units are connected in parallel and powered on, the error related to the fiber-optic is indicated. Please refer to the following steps for troubleshooting.
   - FIBER MULTI MASTER: Multiple units (with panel) are connected in parallel, please confirm whether multiple Masters are set. Select **System→Parallel** menu to reset. There can only be one single unit as the Master, and the other single units must be set to Slave. After the setting is completed, power off and restart each single unit.
   - FIBER EXT UNLOCK: Multiple units (with panel) are connected in parallel, check whether the cable connection of the fiber outer ring (TX and RX) is closed. Then confirm that whether the **System→Parallel** menu is set. There can only be one single unit as the Master, and the other single units must be set to Slave. After the setting is completed, power off and restart each single unit.
5. If the instrument still does not start, contact ITECH technical support engineer.

# 3.2 Set Input Value

The voltage value, current value, power value and resistance value can all be programmed. The user can set different input parameters within the range of specifications according to the need to satisfy a range of test requirement.

After selecting the operation mode, the interface displays the setting value under the selected operation mode and the cursor blinks to prompt. The user can use the following methods to set the values.

- Directly use the number keys to set the value.
- Rotate the knob to set the data in the cursor position. Rotate the knob clockwise to increase the set value and anticlockwise to decrease the set value. Once the data in the cursor position increases to ten, the value will add one to the front position automatically. and once the data in the cursor position decreases to zero, the value will minus one from the front position automatically. This provides convenience for the user to set. The knob can works with the left or right keys. Use the left or right keys to move the cursor position.

Note

After entering the menu interface, the knob can also be used to scroll pages to view menu items.

# 3.3 Use the Front Panel Menu.

The front panel provides multiple menu keys and the user can access the instrument menu by using the front panel keys, including **Config** menu, **System** menu, **Protect** menu and **Function** menu. And the user can change the related system setting in the menu. Each menu is briefly described as follows.

- The user can set the parameters related to electrical properties in the **Config** menu, including the current operation mode, slope, input delay time, Von function.
- The user can set the function related to instrument system in the **System** menu, including the key beeper, Sense function, power-on state, trigger source, communication method, data logger method, digital I/O function setting, parallel function, system information and so on.
- The user can set the parameters related to instrument protection function in the **Protect** menu, including OCP /OPP /UVP.
- **Function** menu includes input list, batterydischarging test function and so on.

The user press the complex keys to enter into the menu interface. The menu is divided according to the function item and the corresponding operation is set in the lowest level menu item. For example, the key beeper is set in **System→-Beep**. Set the **Beep** item to off or on. Please refer to 1.7 Configuration Menu Function, 1.8 System Menu Function and the corresponding chapters for detailed menu description.

After entering the menu interface, the screen displays the optional menu. Rotate the knob to view the menu items. When the number in front of the menu item is blinking, indicates this item is selected currently. Press **[Enter]** key to enter the selected menu item and press **[Esc]** to exit the menu.

# 3.4 On/Off Control

WARNING

- **The [On/Off] key is used to turn the output/input on or off under normal circumstances. Even if the instrument is in control by PC or the keyboard is locked, the [On/Off] is still valid.**
- **The [On/Off] key light is off and turning the output off does not place the instrument in a safe state. Hazardous voltages may be present on all output and guard terminals. Putting the equipment into an output-off state does not guarantee that the outputs are powered off if a hardware or software fault occurs. See the cautions about connecting the test lines before connecting test lines.**

---

You can press the **[On/Off]** key on the front panel to control the input status of the load. If the **[On/Off]** key light is on, indicates that the input is turned on. If the **[On/Off]** key light is off, indicates that the input is turned off.When the load input is on, the operating status flag (CV/CC/CW/CR) on the VFD will be illuminated.

# 4 Load Function

This chapter describes the functions and features of the load. Divided into the following sections:

♦ Programming the Input
♦ Advanced Feature
♦ Protection Function

## 4.1 Programming the Input

### 4.1.1 Select the Operation Mode (Mode)

There are eight modes of operation, which can de divided to basic operation modes and complex operation modes according to function types.

- Basic operation modes: CC (constant current), CV (constant voltage), CW (constant power), CR (constant resistance);
- Complex operation modes: CVCC (CV+CC), CVCR (CV+CR), CRCC (CC +CR), AUTO (CV+CC+CW+CR).

After the desired operation mode is selected in the Config menu, the corresponding key light will be lit. At this time, the setting value in the corresponding mode can be set. If other keys are pressed, the front panel will prompt “Operation Mistake”. For example, when the load is in CVCC complex mode, the **[V-set]** and **[I-set]** key lights are lit. You can set the input voltage value and current value of the load. But **[P-set]** and **[R-set]** keys are not available in this mode.

The procedures to select the operation mode are as follows.

1. Press **[Shift]+[V-set]** (Config) to enter into the configuration menu interface.

   The first displayed menu item Beep is to select the operation mode.
2. Press **[Enter]** key to enter into the parameter setting interface.
3. Press the Left / Right key or turn the knob to adjust the value of this parameter.
4. After the parameter settings are complete, press **[Enter]**.

## 4.1.2 Basic Operation Mode

This series electronic loads operate in constant voltage, current, resistance, or power modes to satisfy a wide range of test requirements.

- Constant Current Operation Mode (CC)

  Under CC mode, the electronic load will consume constant current in regardless of whether the input voltage changes or not, as shown in the following figure. The CC mode ensures that the UUT voltage outputs remain stable when the load varies.

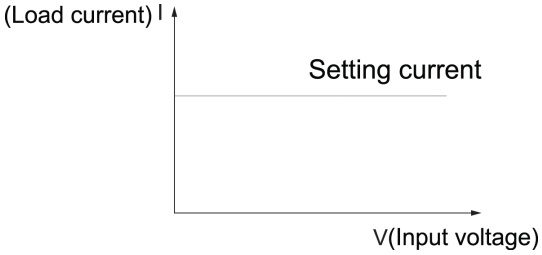


- Constant Voltage Operation Mode (CV)

  Under CV mode, the electronic load will consume sufficient current to maintain the input voltage at setting voltage. As shown in the following figure. For battery chargers or charging stations, CV mode can change their output voltage to ensure the precision of the charging current.

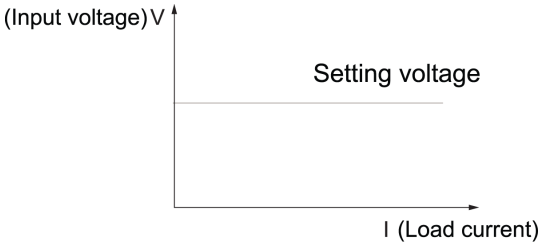


- Constant Power Operation Mode (CW)

  Under CW mode, the electronic load will consume a constant power. If input voltage rises, the input current decreases and power P (= V * I) will maintain at setting power. As shown in the following figure.

  When the UUT is a battery, the electronic load changes to simulate device loading behavior. Many battery discharge applications and power consumption profiles can be simulated for analysis, making the CW mode the best choice for simulating electronic device loads.

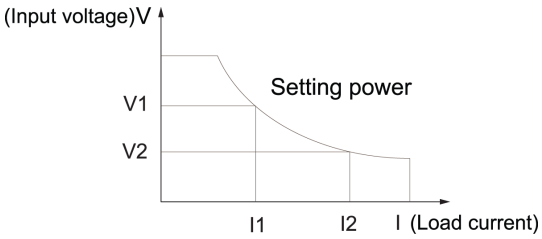


- Constant Resistance Operation Mode (CR)

  Under CR mode, the electronic load is equivalent to a constant resistance and will give linear change of current with input voltage change. As shown in

following figure. The CR mode ensures that the UUT voltage outputs remain stable when the load varies.

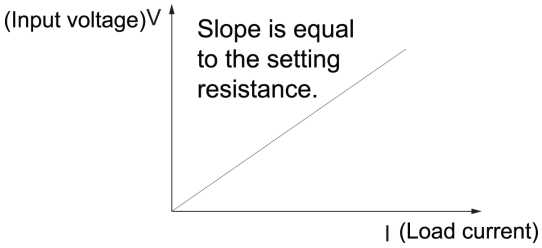


## 4.1.3 Complex Operation Mode

Complex operating modes include CV+CC, CV+CR, CR+CC and AUTO modes, which can satisfy a wide range of test requirements.

- CV+CC Mode

  In CVCC mode, it has to program the constant voltage and constant current first and then start the UUT for output. When the UUT voltage starts to output, the Load will sink in CV mode according to the programmed voltage. When the voltage rises to exceed the set constant current for sinking, it will switch to CC mode for sinking.

  The CV+CC mode can be applied to the load simulation battery and test the charging station or the car charger. When the CV is working, the maximum loading current is limited.

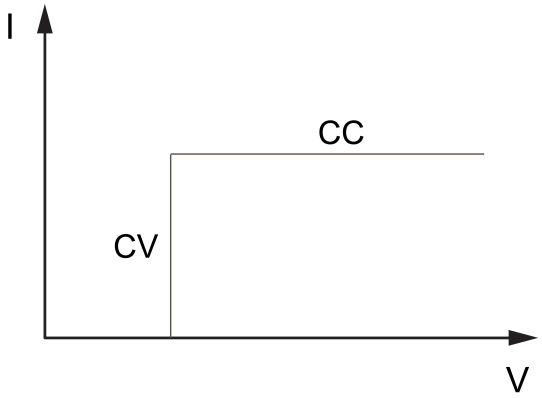


- CV+CR Mode

  In CVCR mode, it has to program the constant voltage and constant resistance first and then start the UUT for output. When the UUT voltage starts to output, the Load will sink in CV mode according to the programmed constant voltage. When the voltage rises to exceed the set constant resistance for sinking, it will switch to CR mode for sinking.

  The CV+CR mode can be applied to the LED simulation and test the LED power supply to get the LED current ripple parameters.

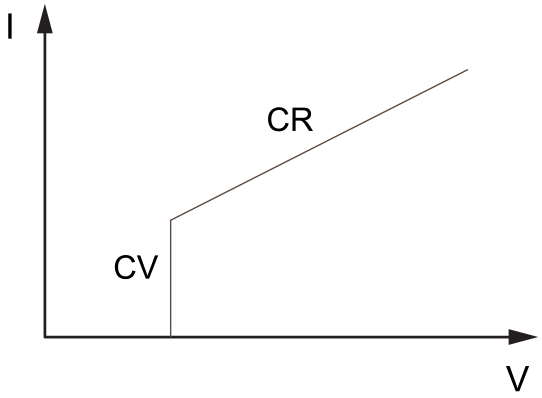


- CR+CC Mode

  In CRCC mode, it has to program the constant resistance and constant current first and then start the UUT for output. When the UUT voltage starts to output, the Load will sink in CR mode according to the programmed resistance. When the voltage rises to exceed the set constant current for sinking, it will switch to CR mode for sinking.

  The CR+CC mode is commonly used in the testing of voltage limiting, current limiting characteristics, constant voltage accuracy, and constant current accuracy of on-board chargers, which prevents over-current protection of on-board chargers.

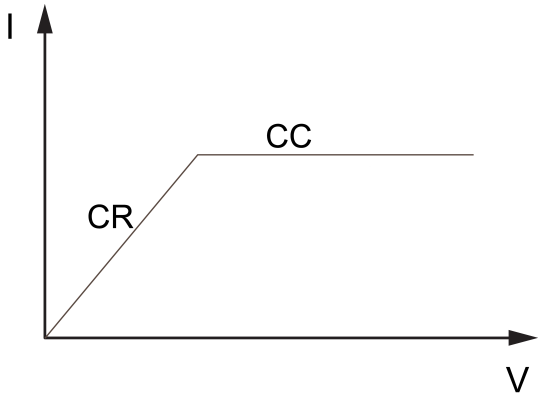


- AUTO (CV+CR+CC+CW)

  In Auto mode, it has to program the constant voltage, constant resistance, constant current and constant power, and then start the UUT for output. When the UUT voltage starts to output, the Load will sink according to the programmed constant voltage in CV mode. When the voltage rises, it will automatically switch to CR mode and to the CC mode at last for sinking. It will switch to CP mode for sinking if the UUT outputs high voltage abnormally.

  Under this mode, the load can automatically switch among CV, CR, CC and CW modes. It is suitable for lithium ion battery charger testing to get a complete V-I charging curve. Moreover, the auto mode can avoid damaging the UUT when the protection circuit is damaged.

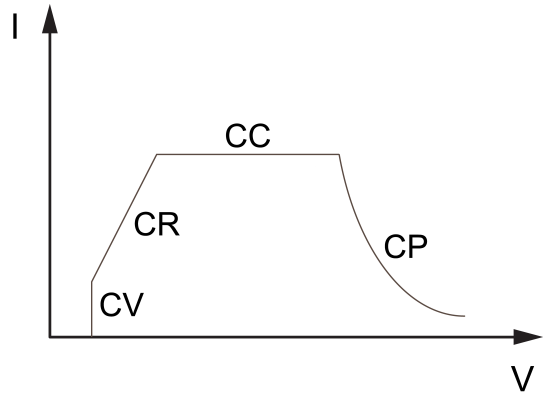


## 4.1.4 Set the Input-On/Input-Off Delay Time （On Delay/ Off Delay）

You can set the input-on/input-off delay time within the range from 0 second to 60 seconds.

- On Delay is from the time that a command to turn on the input is received until the input actually turns on.
- Off Delay is from the time that a command to turn off the input is received until the input actually turns off.

The procedures to set the input delay time are as follows.

1. Press **[Shift]+[V-set]**（Config）to enter into the configuration menu interface.
2. Use knob to select **On Delay** or **Off Delay** and press **[Enter]** to confirm.
3. Use knob or the number keys to adjust the input-on/input-off delay time and press **[Enter]** to confirm.

## 4.1.5 Set I-Rise / I-Fall Slope（I-Rise / I-Fall Slope）

The I-Rise / I-Fall Slope indicates the rate in which the current setting value changes to a new setting value, and it influences the rate of the real time current, triggering current and the dynamic current.

The procedures to set I-Rise / I-Fall Slope are as follows.

1. Press **[Shift]+[V-set]**（Config）to enter into the configuration menu interface.
2. Use knob to select **I-Rise Slope** or **I-Fall Slope** and press **[Enter]** to confirm.
3. Use knob or the number keys to adjust the I-Rise / I-Fall Slope and press **[Enter]** to confirm.

Copyright © Itech Electronic Co., Ltd.

## 4.1.6 Set V-Rise / V-Fall Slope ( V-Rise / V-Fall Slope )

The V-Rise / V-Fall Slope indicates the rate in which the voltage setting value changes to a new setting value, and it influences the rate of the real time voltage, triggering voltage and the dynamic voltage.

The procedures to set V-Rise / V-Fall Slope are as follows.

1. Press **[Shift]+[V-set]** ( Config ) to enter into the configuration menu interface.
2. Use knob to select **V-Rise Slope** or **V-Fall Slope** and press **[Enter]** to confirm.
3. Use knob or the number keys to adjust the V-Rise / V-Fall Slope and press **[Enter]** to confirm.

## 4.1.7 Set P-Rise / P-Fall Slope ( P-Rise / P-Fall Slope )

The P-Rise / P-Fall Slope indicates the rate in which the power setting value changes to a new setting value, and it influences the rate of the real time power, triggering power and the dynamic power.

The procedures to set P-Rise / P-Fall Slope are as follows.

1. Press **[Shift]+[V-set]** ( Config ) to enter into the configuration menu interface.
2. Use knob to select **P-Rise Slope** or **P-Fall Slope** and press **[Enter]** to confirm.
3. Use knob or the number keys to adjust the P-Rise / P-Fall Slope and press **[Enter]** to confirm.

## 4.1.8 Short-Circuit Analog Function

The load can analog a short circuit at input terminal. Under board operation, press the **[Shift]+[Protect]** (Short) key to switch short circuit status. The short circuit status does not influence existing setting value. When the short circuit operation is switched back to OFF status, the load returns back to original setting status.

Actual current value consumed by load at short circuit depends on the existing working mode of load and current range. Under CC, CW and CR modes, maximum short-circuit current is 102% of current range. Under CV mode, short circuit current is equivalent to that constant voltage value of load is 0 V.

**Note**

For 2U models, press the **[Shift]+[.]** (Short) key to switch short circuit status.

## 4.1.9 VON Function ( Von )

Set voltage value (**Level**) to control on/off status of electronic load. Based on Von value load and unload, the load has two modes: Living and Latch. When Living is selected, it indicates that the work load point is in living status; when Latch is selected, it indicates that the work load point is in latch load status. Von Latch function is only available in CC mode.

When testing some power products with slow voltage rise speed, if the electronic load input is opened before power on, the power may latch protection. In this way, the user may set VON value. The electronic load only latches when power voltage is higher than this value.

CAUTION

**Please confirm whether it is necessary to set loading voltage, a step that provides convenience for limiting working voltage value. If not necessary, do not set the loading voltage to prevent unnecessary trouble from failure of loading.**
**If the instrument cannot load, please firstly check whether the VON function is set. If yes, reset the Von value to minimum value (which may be directly set as 0. If minimum voltage value of instrument is not 0, press 0 for confirmation and the menu will automatically set the value as minimum value).**

- When VON LIVING function is started, the load starts load test only when the power voltage rises and is higher than Von Point loading voltage. When the power voltage drops and is lower than Von Point unloading voltage, the load will unload.

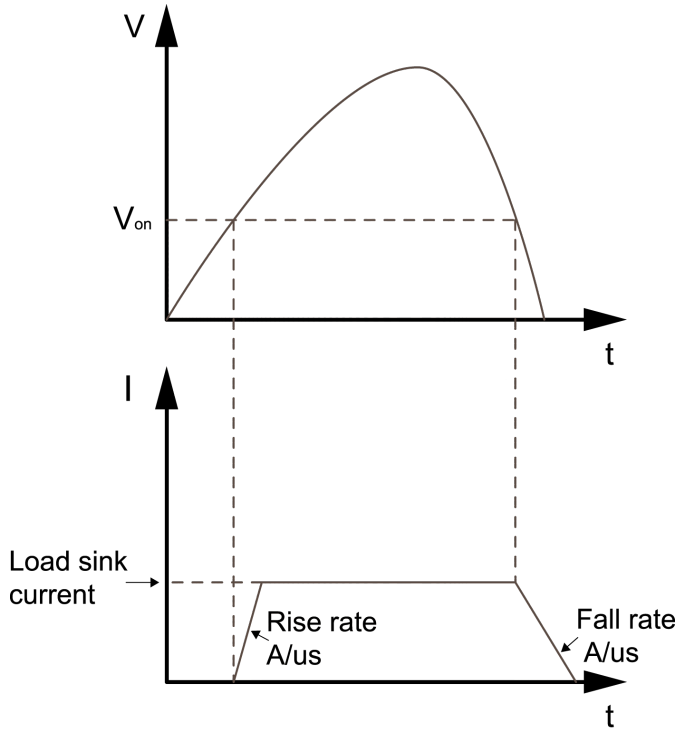


- When VON LATCH function is started, the load starts load test only when the power voltage rises and is higher than Von Point loading voltage. When the power voltage drops and is lower than Von Point unloading voltage, the load will unload.

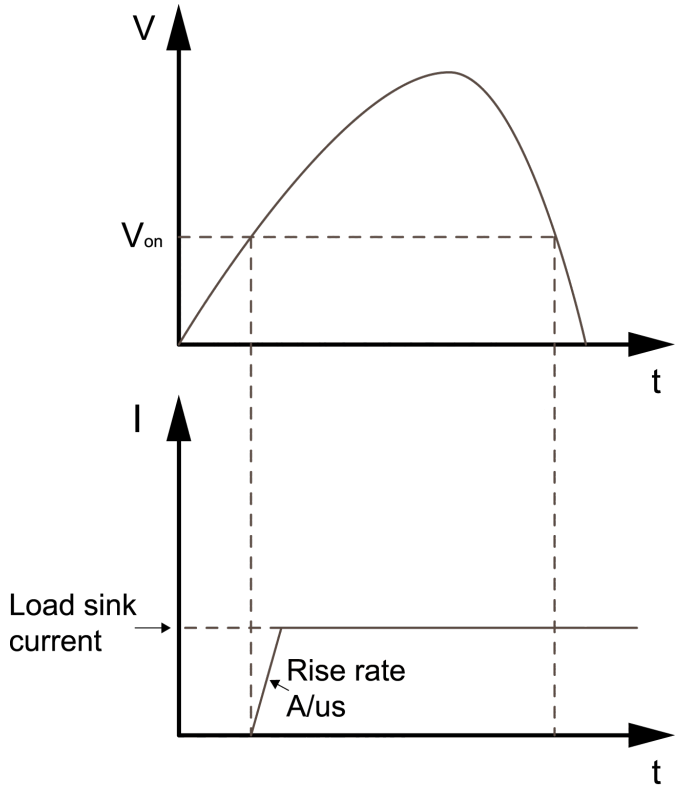


The procedures to set Von function are as follows.

1. Press the composite keys **[Shift]+[V-set]** (Config) on the front panel to enter the configuration menu.
2. Use knob to select **Von** and press **[Enter]**.
3. Use knob or left/right key to select the desired Von mode.
   - Latch mode
   - Living mode
4. Use number keys or knob to set **Level** and press **[Enter]**.

# 4.2 Advanced Feature

## 4.2.1 LIST Function

The IT-M3800 series load supports a total of 10 List files (List01 to List10), each of which can be set up to 200 steps. You need to edit the voltage/current value, slope and time width of each step, or you can set repeat times (1 to 65535) for each List file. After the file is edited completely, you can trigger the selected List file to run according to the selected trigger mode.

。The descriptions of list function menu are listed in the table below.

| LIST | List menu | | | |
|---|---|---|---|---|
| | Run | Indicates to enter the List run mode, waiting for the trigger to run the currently selected List file. | | |
| | Open | Select the List file to open. | | |
| | | USB | Open the List file in the external USB flash disk. | |
| | | | Load | Import the List file from the external USB flash disk into the instrument. |
| | | | Not-Load | Cancel the import operation. |
| | | Internal | Open the List file stored inside the instrument. | |
| | | | Recall Inner List File | Set the name of the recalled List file. |
| | Export | Export the internal List file of the instrument to an external USB flash drive. | | |
| | | File Name | The name of the exported list file. The default suffix is **.csv**, and the file name can only be a string of numbers. | |

| | | | | |
|---|---|---|---|---|
| | Edit | Edit list program. | | |
| | | CC / CV / CW / CR | Set the operation mode for list program: CC, CV, CW or CR. | |
| | | Step Count | The total number of steps included in the List program. | |
| | | Step 1 Value | Parameter value for Step1. The current appears when CC mode is selected; the voltage appears when CV mode is selected. The resistance appears when CR mode is selected; the power appears when CW mode is selected. | |
| | | Step 1 Slope | Slope value setting for Step1. | |
| | | Step 1 Width | Dwell time setting for Step1. The range is from 0.001 to 21000 seconds. | |
| | | Repeat | Set the number of list file repetitions. | |
| | | End State | Set the running state after the list program is running over. | |
| | | | Last | After the List program finishes running, the input is kept as the setting in the last step, and the working mode remains as the setting in the List file. |
| | | | Normal | After the List program finishes running, the working mode and input return to the settings before the List running. |
| | | Trig Out | Function switch that triggers the signal output. It is applicable to the scenario of synchronously controlling multiple units, that is, by connecting the outer loop interfaces TX and RX of the fiber to realize List synchronization triggering between multiple units. | |
| | | | None | Turn off (default) |
| | | | Tout | Turn on |
| | | Save to group | Save the edited List program. | |

## Edit List Program

The following takes CC mode as an example to introduce the operation of editing two test steps.

1. Press the composite keys **[Shift]+[I-set]** (Function) on the front panel to enter the function menu.
2. Select **1. LIST: Off** and press **[Enter]**.
3. Press the Left/Right key to select **Edit** and press **[Enter]** to enter the editing interface.
4. Select **CC** and press **[Enter]** to confirm.
5. Set the total number of steps in the List program and press **[Enter]** to confirm.
6. Set the current, slope and time width of step 1 in turn, and press **[Enter]** to confirm.
7. Set the parameters of step 2 in the same method.
8. Set the number of list repetitions **Repeat**, and press **[Enter]** to confirm.
9. Set the **End State** as **Normal**, and press **[Enter]** to confirm.
10. Depending on the test requirement, choose whether to turn on the function switch that triggers synchronization.
11. Set the currently edited List program name.

    If you choose not to save, press **[Esc]** to exit the editing interface.

## Import List Program

If you need to run the List program on the external USB flash drive, you need to import the List program from the USB flash drive into the instrument.

**Note**

The format of the List file in the USB flash drive must be in **.csv** format and saved in the root directory of the USB flash drive. You can refer to Export List Program to customize editing according to the List file template exported to the USB flash drive.

The procedures are as follows:

1. Insert the USB flash drive into the front panel USB connector.
2. Press the composite keys **[Shift]+[I-set]** (Function) on the front panel to enter the function menu.

3. Select **1. LIST: Off** and press **[Enter]**.
4. Press the Left/Right key to select **Open** and press **[Enter]**.
5. Select **USB** and press **[Enter]**.

   At this point, the system will automatically read all the List files in the root directory of the USB flash drive. The interface is displayed as follows:

   ```
   XXX.csv
   Not-Load  Load   YY/ZZ
   ```

   *XXX* indicates the name of the List file; *YY* indicates the serial number of the current List file; *ZZ* indicates the total number of the List file.
6. Use knob to select the List file.
7. Press the Left/Right key to select **Load**, press **[Enter]** to complete the import, and wait for the trigger to run this List file.

   At this point, the interface returns to the main interface of the system and **Lxx/xxxx WTG** is displayed in the lower right corner.

### Select Internal List Program

You can select a List file saved inside the instrument to be in the **Open** state and wait for subsequent triggers to run. The procedures are as follows:

1. Press the composite keys **[Shift]+[I-set]** (Function) on the front panel to enter the function menu.
2. Select **1. LIST: Off** and press **[Enter]**.
3. Press the Left/Right key to select **Open** and press **[Enter]**.
4. Press the Left/Right key to select **Internal** and press **[Enter]**.
5. Set the name of the List file to be recalled (that is, the file name set in **Edit**), and press **[Enter]**.

   The interface returns to the main interface of the LIST function, which is displayed as follows:

   ```
   FUNC   LIST
   Run Open Edit Export
   ```

   If you select **Run** and press **[Enter]**, the instrument will enter LIST mode and wait for the trigger to run.

### Export List Program

Supports exporting the internal List file to an external USB flash drive. The exported List file is saved in **.csv** format.

1. Insert the USB flash drive into the front panel USB connector.

2. Press the composite keys **[Shift]+[I-set]** (Function) on the front panel to enter the function menu.
3. Select **1. LIST: Off** and press **[Enter]**.
4. Press the Left/Right key to select **Open** and press **[Enter]**.
5. Press the Left/Right key to select **Internal** and press **[Enter]**.
6. Set the name of the List file to be recalled (that is, the file name set in **Edit**), and press **[Enter]**.

   The interface returns to the main interface of the LIST function, which is displayed as follows:

   ```
   FUNC    LIST
   Run Open Edit Export
   ```

7. Press the Left/Right key to select **Export** and press **[Enter]**.
8. Press the Left/Right key to select **Yes** and press **[Enter]**.
9. Set the name of the List file to be exported, and press **[Enter]**.

   Indicates that the selected List file in **Open** is exported to the USB flash drive.

## Run the List Program

You can select a List file to execute according to your needs, so that the instrument inputs the corresponding waveform sequence. Take the List file in **Internal** as an example. The steps are as follows:

1. Press the composite keys **[Shift]+[I-set]** (Function) on the front panel to enter the function menu.
2. Select **1. LIST: Off** and press **[Enter]**.
3. Press the Left/Right key to select **Open** and press **[Enter]**.
4. Press the Left/Right key to select **Internal** and press **[Enter]**.
5. Set the name of the List file to be recalled (that is, the file name set in **Edit**), and press **[Enter]**.

   The interface returns to the main interface of the LIST function, which is displayed as follows:

   ```
   FUNC    LIST
   Run Open Edit Export
   ```

6. Press the Left/Right key to select **Run** and press **[Enter]**.

   At this point, the interface returns to the main interface of the system and **Lxx/xxxx WTG** is displayed in the lower right corner.
7. Turn on the **[On/Off]**.
8. Based on the selected trigger method, perform the trigger operation.

Take the manual trigger as an example. Press **[Shift]+[On/Off]**(Trigger) on the front panel to run the selected List file. For details about the List trigger method, see 5.8 Select Trigger Source (Trig Source).

Note

After the List file finishes running, the system determines whether to return to the working mode before the List is run according to the **Normal** or **Last** option you selected.

### Stop Running the List Program

When the List program is running, if you need to stop running, you can do the following: Press the composite keys **[Shift]+[I-set]** (Function) on the front panel to enter the function menu.

At this point, the interface will prompt whether to stop the running of the Function, you can press the Left/Right key to select **Stop**, then the current running will be stopped, and the Function menu item will be displayed, you can re-enter the Function menu for editing; if **Reset** is selected, it means to stop the present running and return to the main interface to wait for the next trigger operation.

## 4.2.2 Battery Discharging Test Function

The IT-M3800 series load provides the battery discharging test function, which is suitable for discharging tests on all types of portable batteries. The user can set three cut off conditions: cut off voltage, current off capacity and the charging time. If anyone of the three conditions are satisfied, the test will be interrupted automatically.

| BATTERY | Battery discharging test function | | |
|---|---|---|---|
| | Run | Indicates that the battery test mode is entered and waits to trigger the running of the currently edited battery test file. | |
| | Edit | Edit the battery discharging test file. | |
| | | Cut Off Voltage | Battery test cut-off voltage |
| | | Cut Off Capacity | Battery test cut-off capacity |
| | | Cut Off Timer | Battery test cut-off time |

The operation steps to set the battery discharging test function are as follows.

1. Press the composite keys **[Shift]+[I-set]** (Function) on the front panel to enter the function menu.

2. Use knob to select **BATTERY** and press **[Enter]**.

   The interface is displayed as follows:

   ```
   BATTERY TEST
   Run Edit
   ```

3. Press the Left/Right key to select **Edit** and press **[Enter]**.
4. Set the **Cut Off Voltage**, **Cut Off Capacity** and other parameters, and then press **[Enter]** to confirm.

   After the parameter setting is completed, the interface returns to the Battery function main interface and displays as follows:

   ```
   BATTERY TEST
   Run Edit
   ```

5. Press the Left/Right key to select **Run** and press **[Enter]**.

   The instrument will enter the battery test mode and wait for the battery test to be triggered.

6. Press the **[On/Off]**.
7. Based on the selected trigger method, perform the trigger operation.

**Note**

The trigger method of the battery test is consistent with the trigger method of the List function, that is, the List trigger source is also effective for the Battery function.

If you want to stop running during the battery test, you can do the following: Press the composite keys **[Shift]+[I-set]** (Function) on the front panel to enter the function menu.

At this point, the interface will prompt whether to stop the running of the Function, you can press the Left/Right key to select **Stop**, then the current running will be stopped, and the Function menu item will be displayed, you can re-enter the Function menu for editing; if **Reset** is selected, it means to stop the present running and return to the main interface to wait for the next trigger operation.

# 4.3 Protection Function

The series instrument provides the protection functions such as overcurrent, overpower and undervoltage protection. The corresponding protection parameters can be configured in the Protect menu.

Press **[Protect]** to enter Protect menu interface. The descriptions of protect menu are listed in the table below.

| Protect | Protection function menu | | |
|---|---|---|---|
| | OCP | Overcurrent protection | |
| | | Off | Turn the OCP function off. |

| | | | | |
|---|---|---|---|---|
| | | On | Turn the OCP function on. | |
| | | | Level | OCP limit |
| | | | Delay | Delay time |
| | OPP | Overpower protection | | |
| | | Off | Turn the OPP function off. | |
| | | On | Turn the OPP function on. | |
| | | | Level | OPP limit |
| | | | Delay | Delay time |
| | UVP | Undervoltage protection | | |
| | | Off | Turn the UVP function off. | |
| | | On | Turn the UVP function on. | |
| | | | Level | UVP limit |
| | | | Delay | Delay time |
| | | | Warm-up | Indicates the instrument warm-up time. This time is set to prevent the instrument from triggering protection when the voltage is rising. Because this transient condition should not be considered as an undervoltage fault and there is no need to trigger protection. |

## Protection Delay

You can specify an OCP/OPP/UVP delay to prevent momentary input settings and status changes from tripping the protection. In most cases these momentary conditions would not be considered an protection fault, and having an OCP/OPP/UVP condition disable the input when they occur would be a nuisance. Specifying an protection delay (**Delay**) can ignore these momentary changes during the specified delay period. Once the delay time has expired and the protection limit condition persists, the input will shut down.

## Protection Prompt

When the instrument enters the protection state, the buzzer sounds (if **Beep** menu item is set as default state **On**), the VFD status indicators **Prot** and **Off** are lit, and **[On/Off]** is turned off.

WARNING

**Although [On/Off] is turned off, there may be dangerous voltage at the input electrodes. Do not touch the wiring cable or the electrode terminals.**

When protection is generated, the VFD screen displays the following information:

- The first row shows the meter voltage and the meter current value.
- The second row shows specific protection information, such as OCP.

### Clear the Protection

After the instrument triggers protection and generates a protection message, you need to troubleshoot the possible cause. When the cause is cleared, the VFD will still prompt the protection information. You can manually clear the protection information record through the following methods.

- Input a pulse signal to pin 1 of the rear panel **P-IO** to clear the protection information.

  For details, see 5.11.1 IO–1. Ps-Clear, Not-Invert.
- Press the **[Esc]** or **[Enter]** key on the front panel to manually clear the protection information.
- Connected to the host computer, the PC sends a **PROTection:CLEar** command to the instrument to clear the protection information.

After the protection state is cleared, you need to press the **[On/Off]** key on the front panel or send the **OUTPut ON** command to the instrument to reopen **[On/Off]**.

## 4.3.1 Set Over-Current Protection (OCP)

Users can enable the OCP function and set the protection limit **Level** and protection delay time **Delay**. When the current (i.e., the Meter value) is greater than this protection limit and the delay time is exceeded, the instrument will enter the OCP state.

### Possible Cause

Many reasons can cause OCP, the details are as follows:

- The set protection limit **Level** is lower than the current Meter value.

- Input too high external current.

### How to Set

The operation steps to set OCP are as follows.

1. Press the composite keys **[Protect]** on the front panel to enter the protection menu. (1U Model)
2. Press the composite keys **[Shift]+[R-set]** (Protect) on the front panel to enter the protection menu. (2U Model)
3. Rotate the knob to select **OCP** and press **[Enter]**.
4. Press the left/right key or rotate the knob to select **On** and press **[Enter]** to enter the setting interface.
5. Set the protection limit **Level** and the delay time **Delay** in sequence, and press **[Enter]** to confirm.

## 4.3.2 Set Over-Power Protection (OPP)

Users can enable the OPP function and set the protection limit **Level** and protection delay time **Delay**. When the power (i.e., the Meter value) is greater than this protection limit and the delay time is exceeded, the instrument will enter the OPP state.

### Possible Cause

Many reasons can cause OPP, the details are as follows:

- The set protection limit **Level** is lower than the power Meter value.
- Input too high external power.

### How to Set

The operation steps to set OPP are as follows.

1. Press the composite keys **[Protect]** on the front panel to enter the protection menu. (1U Model)
2. Press the composite keys **[Shift]+[R-set]** (Protect) on the front panel to enter the protection menu. (2U Model)
3. Rotate the knob to select **OPP** and press **[Enter]**.
4. Press the left/right key or rotate the knob to select **On** and press **[Enter]** to enter the setting interface.

5. Set the protection limit **Level** and the delay time **Delay** in sequence, and press **[Enter]** to confirm.

## 4.3.3 Set Under-Voltage Protection (UVP)

Users can enable the UVP function and set the instrument warm-up time **Warm-up**, protection limit **Level** and protection delay time **Delay**. When the voltage (i.e., the Meter value) is lower than this protection limit and the warm-up time, delay time are exceeded, the instrument will enter the UVP state.

### Possible Cause

Many reasons can cause UVP, the details are as follows:

- The set protection limit **Level** is greater than the voltage Meter value.
- Input too low external voltage.

### How to Set

The operation steps to set UVP are as follows.

1. Press the composite keys **[Protect]** on the front panel to enter the protection menu. (1U Model)
2. Press the composite keys **[Shift]+[R-set]** (Protect) on the front panel to enter the protection menu. (2U Model)
3. Rotate the knob to select **UVP** and press **[Enter]**.
4. Press the left/right key or rotate the knob to select **On** and press **[Enter]** to enter the setting interface.
5. Set the warm-up time **Warm-up**, protection limit **Level** and delay time **Delay** in sequence, and then press **[Enter]** to confirm.

## 4.3.4 Over-Temperature Protection (OTP)

When internal temperature of instrument is higher than about 85 °C, the instrument is under temperature protection. At this time, the instrument will automatically be **OFF** and VFD status indicator **Prot** lights up and the screen prompts **OTP**.

### Possible Cause

To prevent damaging heat build-up and ensure specified performance, make sure there is adequate ventilation and air flow around the instrument to ensure

proper cooling. Do not cover the ventilation holes on the rear panel, sides, or bottom of the instrument. Even with proper ventilation, the instrument can overheat in the following situations.

- If the ambient temperature is too high.
- If you use the instrument to test for long periods.

### How to Set

The OTP limit does not need to be set, and the internal device of the instrument automatically detects and determines whether to enter the OTP state.

If an over-temperature condition occurs, power off the instrument and allow it to cool for at least 30 minutes. After the internal temperature of the instrument has cooled down, power it on again.

CAUTION

**When you return power to the instrument, verify that the cooling fan is running. If not, please contact ITECH Technical Support. Leaving the instrument powered on with an inoperative cooling fan may result in damage to the instrument.**

## 4.3.5 Sense Reverse Protection

The instrument defaults to provide sense reverse protection. The premise is that the Sense switch is turned on. When the input state is ON and the difference between input terminal voltage and sense remote voltage exceeds the specified voltage, sense reverse protection will be enabled after 500ms. The instrument input will be immediately switched to Off and the display screen will display **SENSE ERR** if the sense terminals are reversed.

When the instrument is in Sense Reverse Protection state, you should check whether the polarities are connected reversely or not firstly. If yes, you can reopen the input after the polarities connect correctly.

The voltage difference between input terminal and remote sense terminal of each model is not the same. When the remote sense terminal is connected reversely, the maximum voltage will not exceed the sum of input terminal voltage and the difference voltage.

**Note**

When Sense is reversed or short-circuited, the voltage meter value is displayed as a positive/negative value close to 0, and abnormal high voltage input does not occur, which can avoid damage to the DUT.

# 5 Basic Operation

This chapter describes the basic functions and features of the instrument. Divided into the following sections:


♦ Local/Remote Mode Switch
♦ Key Lock Function
♦ Save and Recall Operations
♦ Data Logging Function
♦ Set the Beeper Status (Beep)
♦ Set the Power-on State (PowerOn)
♦ Sense Function (Sense)
♦ Select Trigger Source (Trig Source)
♦ Set the Communication Information (I/O Con)
♦ Set Parallel Operation Mode (Parallel)
♦ Digital I/O Function (Digital Port)
♦ Analogue Function (Ext-Program) (Optional)
♦ View the System Information (System Info)
♦ Restored to Factory Setting (System Reset)
♦ Observe Power Grid Information (AC-Meter)
♦ Display Loading Time (Disp on timer)
♦ System Upgrade


## 5.1 Local/Remote Mode Switch

The load provides both local and remote operation modes. The default mode of the load is local operation mode.

- Local operation mode: Use the front panel keys to control the load.
- Remote operation mode: The load is connected to PC, and the user uses the software in PC to control the load remotely.
  - During remote control operation, the remote symbol “Rmt” is displayed. All panel keys, except the **[On/Off]** and **[Shift]+[3]** (Local) keys, are locked.
  - You can press **[Shift]+[3]** (Local) to switch the remote control to local control. The mode modification will not affect the input parameters of the load.

# 5.2 Key Lock Function

This function can prevent the load from the panel keys misoperation during usage. Press the composite keys **[Shift]+[2]** (Lock) to lock front panel keys and the lock symbol "*" is shown on the front panel display. All panel keys, except the **[On/Off]** and **[Shift]+[2]** (Lock) keys, are locked. You can repress **[Shift]+[2]** (Lock) to unlock the front panel.

# 5.3 Save and Recall Operations

This series load can save up to 10 common parameters in nonvolatile memory (No. 1 to No. 10) for user to recall conveniently. The saved settings include the following parameters.

| Category | Parameter |
|---|---|
| Main interface | Voltage setting under CV mode: Vs |
| | Current setting under CC mode: Is |
| | Power setting under CW mode: Ps |
| | Resistance setting under CR mode: Rs |
| | Voltage setting and current setting under CVCC mode: Vs and Is |
| | Voltage setting and resistance setting under CVCR mode: Vs and Rs |
| | Current setting and resistance setting under CRCC mode: Is and Rs |
| | Voltage setting, current setting, resistance setting and power setting under AUTO mode: Vs, Is, Ps and Rs |
| Config Menu | Operation mode |
| | I-Rise Slope |
| | I-Fall Slope |
| | Von function mode and level |

Copyright © Itech Electronic Co., Ltd.

### 5.3.1 Save Operation

The save operation procedures are as follows:

1. Press the composite keys **[Shift]+[R-set]**(Save) to enter the parameter save interface. (1U Model)
2. Press the composite keys **[Shift]+[+/-]** (Save) to enter the parameter save interface. (2U Model)
3. Set the storage location.

   Enter a number in the "Save data to bank=1" to set the storage location in non-volatile memory.
4. Press **[Enter]** to save the parameters.

### 5.3.2 Recall Operation

You can recall the parameters you saved in the specified memory location as the setting values.

1. Press **[Shift]+[Enter]** (Recall) to enter the parameter recall interface. (1U Model)
2. Press **[Shift]+[0]** (Recall) to enter the parameter recall interface. (2U Model)
3. Set the storage location.

   Enter a number in the “Recall data from bank=1” to set the storage location in non-volatile memory.
4. Press **[Enter]** to recall the parameters.

## 5.4 Data Logging Function

This series Regenerative DC Electronic Load supports the recording and saving of test data. This Chapter introduces how to use this function in details.

The user can select the following data sources for recording:

- Voltage

  Only records voltage data during the data acquisition period.
- Current

  Only records current data during the data acquisition period.
- Voltage and current

  Records current and voltage data during the data acquisition period.

## Configure the Function Menu

1. Press the composite button **[Shift]+[1]** (Log) on the front panel to enter the configuration menu of the data logging function.

   The parameters are described as follows:

| Menu Item | Description | Setting |
|---|---|---|
| **Sample Period** | This parameter indicates the data sampling interval (unit: s), that is, the test data is recorded once every *X* seconds.<br>The input range supported by the instrument is: 0.001-100s | Set the value by inputting the value through the number key or rotating the knob. |
| **Duration** | This parameter indicates the time for data recording (unit: s), namely, the data recording will be completed in *Y* seconds and be ready for the next data record.<br>The input range supported by the instrument is: 0-50000000s | |
| **Source** | This parameter indicates the source of recorded data, including voltage (V), current (I), voltage and current (V+I). | Use the Left and Right arrow key or the rotation knob to select. |
| **Data Type** | This parameter indicates the type of recorded data, including:<br>• **Aver**: This is the default selected data type, namely, the average of all data acquired in the data recording period as indicated in the table of saved data.<br>• **Aver+Max+Min**: If this option is selected, it means the average value, maximum value and minimum value of data acquired in the data recording period as indicated in the data saving table. | |

2. Set the value of **Sample Period** and press **[Enter]**.
3. Set the value of **Duration** and press **[Enter]**.

4. Set the value of **Source** and press **[Enter]**.
5. Set the value of **Data Type** and press **[Enter]**.

### Select the Trigger Method

See the steps in the 5.8 Select Trigger Source (Trig Source) section to set how the data logging is triggered.

Note

This setting result is only valid for data recording function. When List function is used, the method for triggering the running of List files needs to be additionally set (by default, triggered by the panel).

### Start Data Logging

CAUTION

- **Before this operation, make sure to connect the USB memory device to the memory port on the front panel (The USB interface on the rear panel can only be used for connecting the PC) so that the recorded data can be stored in the external storage device. Otherwise, the Data Recording function is not available for usage.**
- **Do not connect the USB communication interface on the rear panel to the PC, otherwise the Data Recording function will be unavailable. If you need a communication connection with a PC, use a communication interface other than USB, such as LAN.**

- **Trigger immediately**

  Perform a trigger operation immediately.

- **Manual**

  Press the composite button **[Shift] + [On/Off]** (Trigger) on the front panel to trigger.

- **Bus**

  Triggered by the SCPI instruction, for example, when the instrument receives the trigger command ***TRG**, a trigger operation is performed.

- **Voltage trigger**

  When the DC terminals detect that the voltage reaches the trigger voltage setting value and is within the range of the upper and lower trigger limits, a data recording operation is triggered.

– Level: Trigger threshold.

– Up-Level: Trigger upper limit value.

– Down-Level: Trigger lower limit value.

- **Current trigger**

  When the DC terminals detect that the current reaches the trigger current setting value and is within the range of the upper and lower trigger limits, a data recording operation is triggered.

  – Level: Trigger threshold.

  – Up-Level: Trigger upper limit value.

  – Down-Level: Trigger lower limit value.

- **External**

  Connect to pin 4 of the digital I/O interface (P-IO) and set pin 4 to **Ext-Trig→-Trig-In→Dlog** to trigger.

  For details, see 5.11.4 IO–4.Trig(in), Not-Invert.

After the data recording function is started, the recorded data is saved in USB memory device in .csv format. The user can get access to these files for analysis based on needs.

# 5.5 Set the Beeper Status (Beep)

The user can turn the instrument beeper sound on or off base on personal requirement.

The beeper sound works in the following scenarios:

- A beeper sound produced when the front panel key is pressed.
- When an error is generated inside the instrument, such as when the instrument receives an unprocessable command in the remote state. At this time, the instrument produces a beeper sound, and the flag “Error” appears on the VFD.
- When the instrument is under protection status, such as over-temperature protection. At this time, the instrument produces the beeper sound.

The setting procedures are as follows:

1. Press the composite keys **[Shift]+[P-set]** (System) on the front panel to enter the system menu.

   The first displayed menu item **Beep** is used to set the beeper status.

2. Press **[Enter]** key to enter the parameter setting interface.

3. Press the Left / Right key or turn the knob to adjust the value of this parameter.
   - On: Default value, indicates the beeper is on.
   - Off: Indicates the beeper is off.
4. After the parameter settings are complete, press **[Enter]**.

   At this point, the beeper status takes effect immediately.

# 5.6 Set the Power-on State (PowerOn)

This menu item is used to control the settings and input state when the load is powered on.

The detailed power-on parameters and input state are as follows.

- The voltage, current, power, resistance setting values displayed on the main interface when the instrument is powered on.
- The working mode displayed on the main interface when the instrument is powered on.
- Parameter setting values in the **Config** menu.
- The input state of the load, i.e., the **[On/Off]** key state.

The procedures to set the menu item are as follows.

1. Press the composite keys **[Shift]+[P-set]** (System) on the front panel to enter the system menu.
2. Turn the knob to select the **PowerOn** and press **[Enter]**.
3. Press the Left / Right key or turn the knob to adjust the value of this parameter.
   - Reset: Default value, indicates when the instrument is powered on, the instrument will initialize some parameter settings or state.

     The affected parameters and the reset information are as shown in the following table.

**Table 5–1 Initial value of the parameter**

| Category | Parameter | Initial Value |
|---|---|---|
| Main interface | Voltage setting under CV mode: Vs | Rated voltage of the instrument |
| | Current setting under CC mode: Is | 0A |

| Category | Parameter | Initial Value |
|---|---|---|
| | Power setting under CW mode: Ps | 0W |
| | Resistance setting under CR mode: Rs | Rated maximum resistance value of the instrument |
| | Voltage setting under CVCC mode: Vs | Rated voltage of the instrument |
| | Current setting under CVCC mode: Is | 0A |
| | Voltage setting under CVCR mode: Vs | Rated voltage of the instrument |
| | Resistance setting under CVCR mode: Rs | Rated maximum resistance value of the instrument |
| | Current setting under CRCC mode: Is | 0A |
| | Resistance setting under CRCC mode: Rs | Rated maximum resistance value of the instrument |
| | Voltage setting under AUTO mode: Vs | Rated voltage of the instrument |
| | Current setting under AUTO mode: Is | 0A |
| | Power setting under AUTO mode: Ps | 0W |
| | Resistance setting under AUTO mode: Rs | Rated maximum resistance value of the instrument |
| | On/Off state | Off |
| Config menu | Operation mode | CC |
| | I-Rise Slope | 0.1A/ms |
| | I-Fall Slope | 0.1A/ms |
| | Von mode | Latch |
| | Von level | 0V |

| Category | Parameter | Initial Value |
|---|---|---|
| | On Delay/Off Delay | 0s |

- Last: Indicates when powered on, the instrument will remain the same parameter settings and input status as last time you powered off the instrument.
- Last+Off: Indicates when powered on, the instrument will remain the same settings as last time you powered off the instrument, but the input status is **Off**.

4. After the parameter settings are complete, press **[Enter]**.

   For example, **Last** is selected, and the voltage value is set to 8V. After the instrument is powered off and then powered on, the voltage displayed on the interface is 8V.

# 5.7 Sense Function (Sense)

This menu item is used to switch the load to local measurement or remote sensing.

This series load supports two connection methods: Local measurement and Remote sensing. The remote sensing is used for maximizing measurement accuracy. (Refer to 2.4 Connecting the Device Under Test (DUT))

The procedures to set the menu item are as follows.

1. Press the composite keys **[Shift]+[P-set]** (System) on the front panel to enter the system menu.
2. Turn the knob to select the **Sense** and press **[Enter]**.
3. Press the Left / Right key or turn the knob to adjust the value of this parameter.
   - Off: Default value, indicates turn the sense function off.
   - On: Indicates turn the sense function on.
4. After the parameter settings are complete, press **[Enter]**.

# 5.8 Select Trigger Source (Trig Source)

For this series load, the List and data logging functions can be triggered for running by the following methods:

- Immediate: Perform a trigger operation immediately.
- Manual: Default value, indicates the trigger occurs when the **[Shift]+[On/Off]** (Trigger) keys are pressed from the front panel.
- Bus: Indicates the trigger occurs via the communication cables. When the trigger command ***TRG** is received, the instrument generates a trigger.
- Voltage (only available in DLogTrig Source): Voltage trigger.

  When the DC terminals detect that the voltage reaches the trigger voltage setting value and is within the range of the upper and lower trigger limits, a data recording operation is triggered.

  – Level: Trigger threshold.

  – Up-Level: Trigger upper limit value.

  – Down-Level: Trigger lower limit value.
- Current (only available in DLogTrig Source): Current trigger.

  When the DC terminals detect that the current reaches the trigger current setting value and is within the range of the upper and lower trigger limits, a data recording operation is triggered.

  – Level: Trigger threshold.

  – Up-Level: Trigger upper limit value.

  – Down-Level: Trigger lower limit value.
- External: Indicates the trigger occurs via the pin 4 of the digital I/O interface (P-IO).

  For details, see 5.11.4 IO–4.Trig(in), Not-Invert.

The List function and the data logging function have the same steps for selecting the trigger source. They need to be set separately in different menu items (**ListTrig Source** and **DLogTrig Source**). Therefore, this section takes the List trigger source setting as an example to introduce the operation steps.

1. Press the composite keys **[Shift]+[P-set]** (System) on the front panel to enter the system menu.
2. Turn the knob to select the **ListTrig Source** and press **[Enter]**.

Note

- When setting the trigger source for data logging, select the **DLogTrig Source** menu item.
- The List trigger source set here is also valid for triggering other functions in the **Function** menu.

3. Press the Left / Right key or turn the knob to adjust the value of this parameter.
4. After the parameter settings are complete, press **[Enter]**.

# 5.9 Set the Communication Information (I/O Con)

This menu item is used to set the communication information between instrument and PC. The standard communication interfaces for this series load are USB, LAN, CAN and VCP. You can also select the non-standard interface GPIB or RS-232 based on personal requirement.

The procedures to set the menu item are as follows.

1. Press the composite keys **[Shift]+[P-set]** (System) on the front panel to enter the system menu.
2. Turn the knob to select the **I/O** and press **[Enter]**.
3. Press the Left / Right key or turn the knob to adjust the value of this parameter.
4. After the parameter settings are complete, press **[Enter]**.

Note

- The default communication method is USB. If other communication method is selected, the related parameters need to be set. For detailed parameter description, refer to 2.5 Remote Interface Connection.
- The instrument supports the non-standard RS-232 and GPIB interfaces, and the configuration items in the menu are dynamically displayed according to the interface user selected.

# 5.10 Set Parallel Operation Mode (Parallel)

This menu item is used to control whether the instrument is working in single mode or in parallel mode. This chapter takes three instruments as an example to describe how to parallelize the single units and how to return from parallel mode to single mode.

The maximum power of this series load is 6 kW. The user can connect load in parallel to provide a greater current and power capability. The load is capable of connecting up to six units in parallel, reaching at most 36 kW. The following figure shows three units connected in parallel, The System Bus is used as connection between master and slaves. Parallel instruments can actively average current.

### Configure the Menu Item

1. Press the composite keys **[Shift]+[P-set]** (System) on the front panel to enter the system menu.
2. Turn the knob to select the **Parallel** and press **[Enter]**.
3. Press the Left / Right key or turn the knob to adjust the value of this parameter.
   - Single: Default value, indicates that the instrument is in single mode.
   - Master: Indicates that the current single unit is set to master in parallel mode. When set to **Master**, you also need to set the number of slaves to be mounted for the master, so you need to set the value of the **Total** parameter. For example, setting **Total = 3** means that the total number of units in the parallel relationship is 3.

     Note

     In the parallel mode, you only need to operate the master. Synchronous operations on other slaves are implemented by operating the master.
   - Slave: Indicates that the instrument is set to the slave in parallel mode.
4. After the parameter settings are complete, press **[Enter]**.

### Set the Parallel Mode

CAUTION

- **Before connecting the system bus, you must ensure that each instrument is in single mode (Single).**
- **Fiber optic cables cannot be flexed or folded. When the cable is too long and needs to be arranged, gently wrap the cable in a circle and gently tie it.**

WARNING

- **Before connecting the cables, ensure that the instrument power switch is off and the main switch of the AC power input (distribution box) is off.**
- **Before connecting 3 single instruments to the AC distribution box, ensure that the distribution box capacity is sufficient. Refer to the corresponding specifications for the AC input parameters of a single instrument.**

The operation steps of parallel function are described below taking 3 instruments (1 Master and 2 Slave) in parallel as an example.

1. Ensure that the power switches of the three units and the main switch of the AC power distribution box are off.
2. Refer Figure 5–1 Wiring connection diagram to connect three units.

**Figure 5–1 Wiring connection diagram**

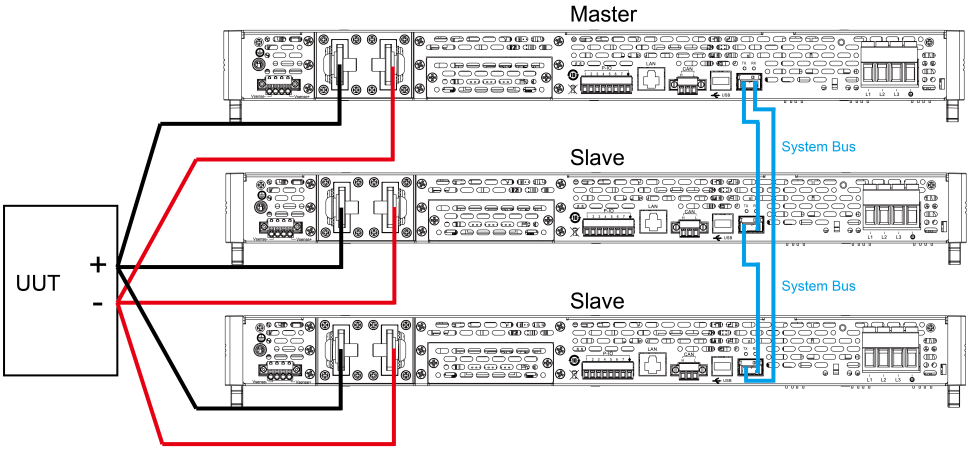


   a. Connect the AC input terminals of the three units separately, and connect them to the AC distribution box.
   b. Connect the DC input terminals of the three units in parallel and connect them to the DUT.
   c. Refer to the blue wiring legend in the figure, connect the System Bus (i.e., the fiber outer ring interfaces TX and RX) for fiber-optic communication between the master and slaves.
3. Turn on the main switch of the AC distribution box and power on each of the three units.
4. Set three units in parallel mode with one master and two slaves.
   a. Press the composite keys **[Shift]+[P-set]** (System) on the front panel to enter the system menu.
   b. Set **Parallel** to **Master** or **Slave** and press **[Enter]**.
   c. After setting the **Master**, you need to set **Total** to 3.

   For details, see Configure the Menu Item.
5. After the parallel menu of the three units are set, restart the instrument separately.

   After the instrument is restarted, the VFD shows that the instrument is working in parallel mode.

## Revert to Single Mode

1. Set each of the three instruments to single mode.

a. Press the composite keys **[Shift]+[P-set]** (System) on the front panel to enter the system menu.

b. Set the **Parallel** to **Single**.

For details, see Configure the Menu Item.

2. Power off the three instruments and turn off the main switch of the AC distribution box.
3. Remove the cables connection of the System Bus and DC input terminals between three units.
4. Power on the three instruments separately.

   After the instrument is restarted, the VFD shows that the instrument is working in single mode.

# 5.11 Digital I/O Function (Digital Port)

This series load supports digital I/O function. The user can realize logic control over signal input or output by related configurations in the system menu.

## Pins Introduction

Different I/O implements different functions. The detailed functions description are shown in the figure below:

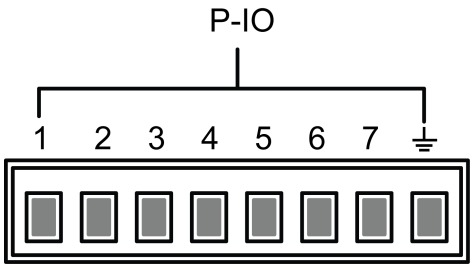


| Pin | Type | Description (Default function) | Properties |
|---|---|---|---|
| 1 | Input/Output | Ps-Fault-Clear, clear the protection state. | Pulse signal |
| 2 | Input/Output | Ps, protection state indicator. | Level signal |
| 3 | Input/Output | Off-Status, OnOff-status indicator. | Level signal |
| 4 | Input/Output | Trig(in), trig signal. | Pulse signal |
| 5 | Input/Output | INH-Living, Turn off the output under emergency status. | Pulse signal |
| 6 | Input/Output | Sync-On, synchronous on control. | Pulse signal |

| Pin | Type | Description (Default function) | Properties |
|---|---|---|---|
| 7 | Input/Output | Sync-Off, synchronous off control. | Pulse signal |
| GND | Ground terminal, that is, the negative terminal corresponding to each of the above 7 pins. | | Level signal |

**Note**

In this chapter, all the pulse signals involved in the digital I/O function are switched from high level to low level.

## General Digital I/O Function

- **Signal definition**

  Digital I/O functions involve input and output levels and pulse signals. The input signal is the control signal provided externally to , the output signal is the level signal provided externally by , and the pulse signal is the edge signal switched between high and low levels.

| | | |
|---|---|---|
| Input signal | High level signal | Typical: 5V |
| | | Range: 1.6V-15V |
| | | Current: ≤100mA |
| | Low level signal | Typical: 0V |
| | | Range: -5V-0.8V |
| | | Current: ≤100mA |
| Output signal | High level signal | Voltage level: 5V |
| | | Current: ≤1mA |
| | Low level signal | Voltage level: 0V |
| | | Current: 0.5mA |
| Pulse | Level rise slope | 10us |
| | Level fall slope | 2us |
| | Width | 30us |

- **Input/Output Function**

  The IO-1 ~ IO-7 pins are featured default function, the user can setting the function of pin according to requirement. The Input and Output are the general digital I/O function, and the parameter settings and functions of the seven pins are the same.

The IO-1~IO-7 pins provide default functions. Users can realize control according to the functions defined. Users can also reset the input or output properties of the present pin and customize the function use of the pin according to their needs.

– When pins 1 to 7 are configured to Output function, either high level (False) or low level (True) can be Output.

– When pins 1 to 7 are configured to Input function, an external signal can be Input to this pin, and the instrument can detect the state of the external signal.

– Under the default condition (**Not-Invert**), when the pin (1 to 7) is configured as **Output→PWM**, the user needs to set the frequency (**PWM Freq**) and duty cycle (**PWM Duty**) values. For example, if the **PWM Freq** is set to 100Hz and the **PWM Duty** is set to 10%, the output waveform is as follows:

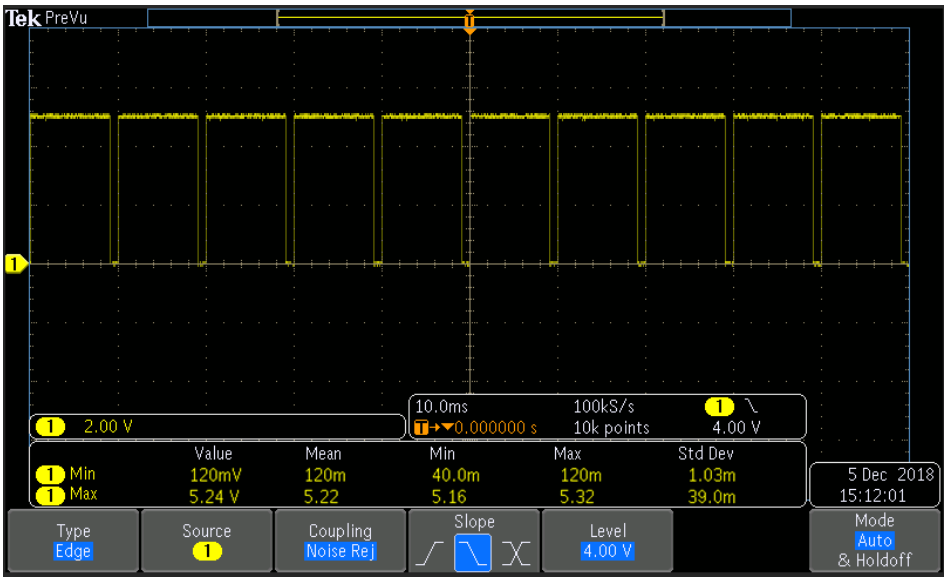


**Note**

In the above figure, the peak voltage (minimum value) is 5.16V and the cycle is 10ms. The high level duration is 9ms and the low level duration is 1ms in one cycle.

- **Signal Revert**

Select Invert or not under the IO Settings menu. If setting to Not-Invert, it means the default level will be valid. If setting to Invert, it means the valid signal is reversed. For example, the IO-5 pin is inhibit output by default and the high level is valid, when select revert Invert, the low level is valid and the instrument output is disabled.

## 5.11.1 IO–1. Ps-Clear, Not-Invert

IO-1 pin can be set to 【Ps-Clear】, 【Input】, 【Output】.

## Parameter Description

<table>
<tr><td>IO–1. Ps-Clear, Not-Invert</td><td colspan="5">Parameter setting for pin 1.</td></tr>
<tr><td rowspan="9"></td><td>Not-Invert</td><td colspan="4" rowspan="2">Indicates whether to invert the input/output pulse or level signal.<br>• Invert: Yes<br>• Not-Invert: No</td></tr>
<tr><td>Invert</td></tr>
<tr><td rowspan="7"></td><td>Ps-Clear</td><td colspan="3">This default function means that when the instrument generates protection, the protection state can be cleared via this pin.</td></tr>
<tr><td>Input</td><td colspan="3">Pin 1 receives the level signal from the outside.</td></tr>
<tr><td>Output</td><td colspan="3">Pin 1 sends the digital signal (1, 0, PWM) to the outside.</td></tr>
<tr><td rowspan="4"></td><td>True</td><td colspan="2">By default (Not-Invert), the output digital signal is 1 (i.e. low level), and in the case of Invert, the output is high level.</td></tr>
<tr><td>False</td><td colspan="2">By default (Not-Invert), the output digital signal is 0 (i.e. high level), and in the case of Invert, the output is low level.</td></tr>
<tr><td>PWM</td><td colspan="2">Digital signal of PWM.</td></tr>
<tr><td rowspan="2"></td><td>PWM Freq</td><td>Frequency</td></tr>
<tr><td>PWM Duty</td><td>Duty cycle</td></tr>
</table>

## How to Use

When pin 1 is set to default **Ps-Clear** function, pin 1 has bi-directional I/O function, which can receive pulse signal input from the external instrument and also can output pulse signal to external instrument. Pulse signal parameter requirements are as follows:

| | |
|---|---|
| Level rise slope | 10us |
| Level fall slope | 2us |
| Minimum time width for low level keep | 30us |

- Pulse input: When the instrument is under protection, the instrument will clear protection after receiving the pulse signal from external input.

  1. Refer to the figure below to connect pin 1 to the external oscilloscope.

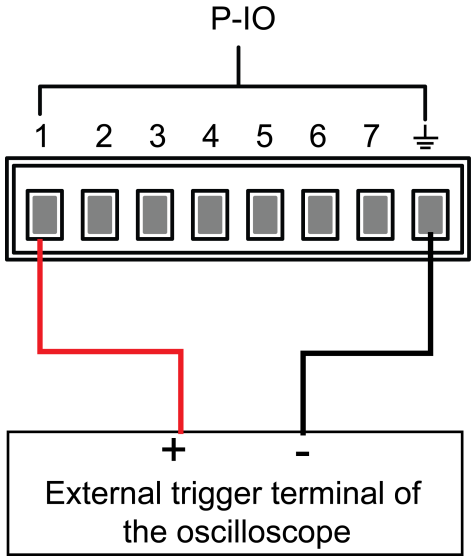


  2. Confirm that pin 1 function is set to the default option, namely **IO-1. Ps-Clear, Not-Invert**.
  3. Taking OVP as an example, set the protection point of OVP.
  4. Build the test environment to enable the instrument to enter the OVP state.
  5. Send pulse signal to pin 1.
  6. Check whether the protection state of this instrument is cleared.

- Pulse output: When the instrument's protection state is released, and **[On/Off]** is from Off to On, pin 1 will send a pulse signal to the external instrument.

  1. After confirming that the instrument's OVP protection is cleared, manually turn on **[On/Off]**.
  2. Check the oscilloscope and confirm whether pin 1 has pulse output.

## 5.11.2 IO–2. Ps, Not-Invert

IO-2 pin can be set to 【Ps】, 【Input】, 【Output】.

### Parameter Description

| IO–2. Ps, Not-Invert | Parameter setting for pin 2. | | | | |
|---|---|---|---|---|---|
| | Not-Invert<br>Invert | Indicates whether to invert the input/output pulse or level signal.<br>• Invert: Yes<br>• Not-Invert: No | | | |
| | | Ps | This default function means the output level from pin 2, which displays that whether the instrument is under protection or not. | | |
| | | Input | Pin 2 receives the level signal from the outside. | | |
| | | Output | Pin 2 sends the digital signal (1, 0, PWM) to the outside. | | |
| | | | True | By default (**Not-Invert**), the output digital signal is 1 (i.e. low level), and in the case of **Invert**, the output is high level. | |
| | | | False | By default (**Not-Invert**), the output digital signal is 0 (i.e. high level), and in the case of **Invert**, the output is low level. | |
| | | | PWM | Digital signal of PWM. | |
| | | | | PWM Freq | Frequency |
| | | | | PWM Duty | Duty cycle |

### How to Use

When pin 2 is set to default **Ps** function, pin 2 will output high or low level based on whether the instrument is under protection or not. Under normal conditions

(Not under protection), and when pin 2 is under default setting (**Not-Invert**), pin 2 outputs high level; when the instrument is under protection, pin 2 outputs low level.

Note

When pin 2 is set to **Invert**, the output level is completely opposite.

1. Refer to the figure below to connect pin 2 to the external oscilloscope.

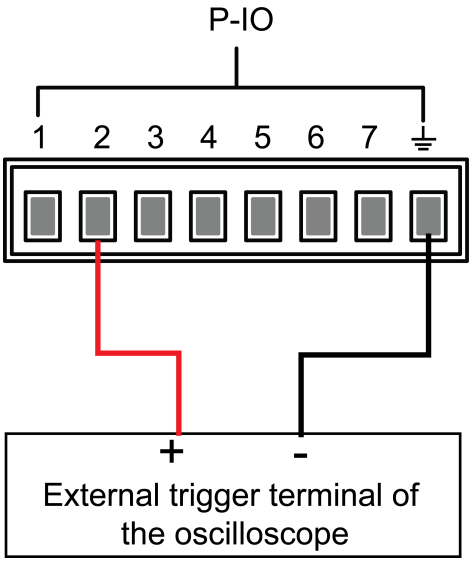


2. Confirm that pin 2 function is set to the default option, namely **IO-2. Ps, Not-Invert**.
3. Taking OVP as an example, set the protection point of OVP.
4. Build the test environment to enable the instrument to enter the OVP state.
5. Check the oscilloscope and confirm that pin 2 outputs low level.

## 5.11.3 IO–3. Off-Status, Not-Invert

IO-3 pin can be set to 【Off-Status】, 【Input】, 【Output】.

### Parameter Description

| IO–3. Off-Status, Not-Invert | Parameter setting for pin 3. | |
|---|---|---|
| | Not-Invert<br>Invert | Indicates whether to invert the input/output pulse or level signal.<br>• Invert: Yes<br>• Not-Invert: No |

| | | | | | |
|---|---|---|---|---|---|
| | | Off-Status | This default function indicates the existing **[On/Off]** state of the instrument. | | |
| | | Input | Pin 3 receives the level signal from the outside. | | |
| | | Output | Pin 3 sends the digital signal (1, 0, PWM) to the outside. | | |
| | | | True | By default (**Not-Invert**), the output digital signal is 1 (i.e. low level), and in the case of **Invert**, the output is high level. | |
| | | | False | By default (**Not-Invert**), the output digital signal is 0 (i.e. high level), and in the case of **Invert**, the output is low level. | |
| | | | PWM | Digital signal of PWM. | |
| | | | | PWM Freq | Frequency |
| | | | | PWM Duty | Duty cycle |

## How to Use

When pin 3 is set to default **Off-Status** function, pin 3 will trigger level output based on the **[On/Off]** state of the instrument. When it is set to (**Not-Invert**), the **[On/Off]** is turned off, and pin 3 outputs high level; the**[On/Off]** is turned on, and pin 3 outputs low level.

Note

When pin 3 is set to **Invert**, the output level is completely opposite.

1. Refer to the figure below to connect pin 3 to the external oscilloscope.

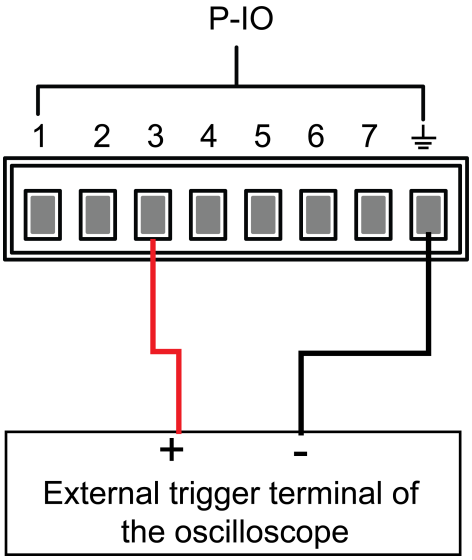


2. Confirm that pin 3 function is set to the default option, namely **IO-3. Off-Status, Not-Invert**.
3. Turn on **[On/Off]**.
4. Check the oscilloscope and confirm that pin 3 outputs low level.

## 5.11.4 IO–4.Trig(in), Not-Invert

IO-4 pin can be set to 【Trig(in)】, 【Input】, 【Output】.

**Parameter Description**

| IO–4.Trig (in), Not-Invert | Parameter setting for pin 4. | | | |
|---|---|---|---|---|
| | Not-Invert<br>Invert | Indicates whether to invert the input/output pulse or level signal.<br>• Invert: Yes<br>• Not-Invert: No | | |
| | | Trig(in) | This default function means that pin 4 of the P-IO performs bi-direction control over the instrument's trigger function. | |
| | | | Trig–Out | Indicates that when the instrument generates a signal (which triggers the Meter function, Data Recording function and List |

| | | | | | |
|---|---|---|---|---|---|
| | | | | function runs for a limited time), pin 4 will output a pulse signal. | |
| | | | Trig-In | Indicates that the instrument will trigger the running of one of the functions below after receiving the external pulse signal. | |
| | | | | Meter | Triggers the running of Meter function. This function needs to be triggered at the upper computer side through SCPI instruction. For details, refer to instructions related to ACQuire in the Trigger subsystem of the Instruction Manual. |
| | | | | Dlog | Triggers the running of data recording function. |
| | | | | List | Triggers the running of List files. |
| | | Input | Pin 4 receives the level signal from the outside. | | |
| | | Output | Pin 4 sends the digital signal (1, 0, PWM) to the outside. | | |
| | | | True | By default (**Not-Invert**), the output digital signal is 1 (i.e. low level), and in the case of **Invert**, the output is high level. | |
| | | | False | By default (**Not-Invert**), the output digital signal is 0 (i.e. high level), and in the case of **Invert**, the output is low level. | |

| | | | | | |
|---|---|---|---|---|---|
| | | | PWM | Digital signal of PWM. | |
| | | | | PWM Freq | Frequency |
| | | | | PWM Duty | Duty cycle |

## How to Use

Taking the triggering of List function as an example, the text below will introduce how to use pin 4's default function **Ext-Trig**.

- Trig–Out

1. Refer to the figure below to connect pin 4 to the external oscilloscope.

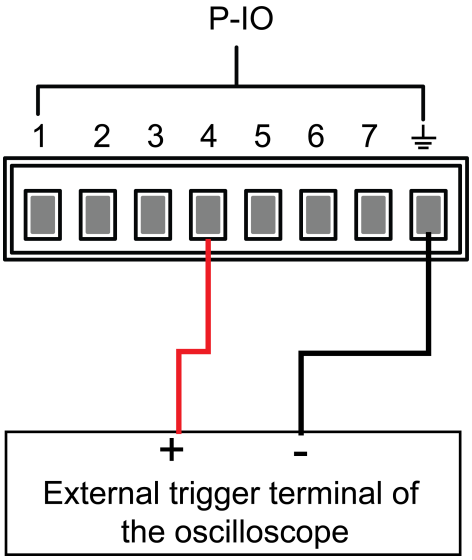


2. Set pin 4's function to **Not-Invert** and **Trig-Out**.
3. Recall the edited List file for trigger running.
4. Press **[Shift]+[On/Off]** (Trigger) on the front panel to trigger the running of List files.

Note

**ListTrig Source** is set to **Manual**.

5. Check the oscilloscope and confirm whether pin 4 has following pulse signal output.

| | |
|---|---|
| Level rise slope | 10us |
| Level fall slope | 2us |
| Minimum time width for low level keep | 30us |

- Trig-In

1. Refer to the figure below to connect pin 4 to the external oscilloscope.

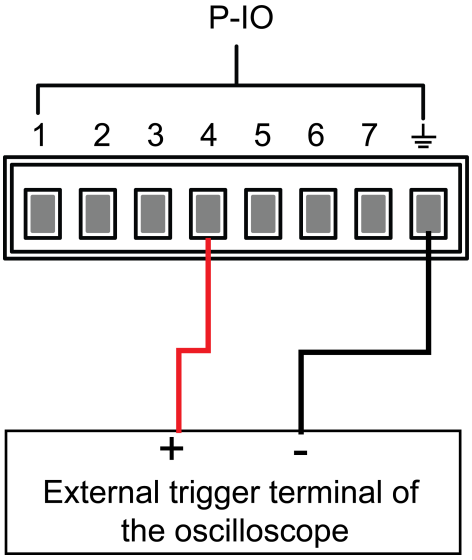


2. Set pin 4's function to **Not-Invert** and **Trig-In→List**.
3. Recall the edited List file for trigger running.
4. Set **ListTrig Source** to **External**.
5. Send pulse signals as per the following requirements from the external oscilloscope to pin 4.

| | |
|---|---|
| Level rise slope | 10us |
| Level fall slope | 2us |
| Minimum time width for low level keep | 30us |

6. Observe the VFD screen on the instrument's front panel to confirm whether the List file is running or not.

## 5.11.5 IO–5. INH-Living, Not-Invert

IO-5 pin can be set to 【Inhibit】, 【Input】, 【Output】.

## Parameter Description

| | | | | | |
|---|---|---|---|---|---|
| IO–5. Living, Not-Invert | Parameter setting for pin 5. | | | | |
| | Not-Invert<br>Invert | Indicates whether to invert the input/output pulse or level signal.<br>• Invert: Yes<br>• Not-Invert: No | | | |
| | | Inhibit | This default function means that pin 5 of the P-IO controls the operation of the instrument. | | |
| | | | Living | Select Living, and load will be operated in the mode of Living. | |
| | | | Latch | Select Latch, and load will be operated in the mode of Latch. | |
| | | Input | Pin 5 receives the level signal from the outside. | | |
| | | Output | Pin 5 sends the digital signal (1, 0, PWM) to the outside. | | |
| | | | True | By default (**Not-Invert**), the output digital signal is 1 (i.e. low level), and in the case of **Invert**, the output is high level. | |
| | | | False | By default (**Not-Invert**), the output digital signal is 0 (i.e. high level), and in the case of **Invert**, the output is low level. | |
| | | | PWM | Digital signal of PWM. | |
| | | | | PWM Freq | Frequency |
| | | | | PWM Duty | Duty cycle |

## How to Use

- When pin 5 is set to **Inhibit-Living** (**Not-Invert**), pin 5 can control the instrument's input state based on the level signal from external input.

– Under default conditions (namely, pin 5 is not connected), the input is high level, and it will not impact the instrument's input state.

– When the **[On/Off]** is in On state, input low level to pin 5, and it will impact the input state: The **[On/Off]** button light is lighted on and VFD still displays **On**, but the actual input is 0; when pin 5 receives high level signal again, the input state is recovered.

Note

If pin 5 is set to **Invert**, input high level to pin 5, and it will impact the input state.

1. Referring to the figure below, connect pin 5 to the external oscilloscope.

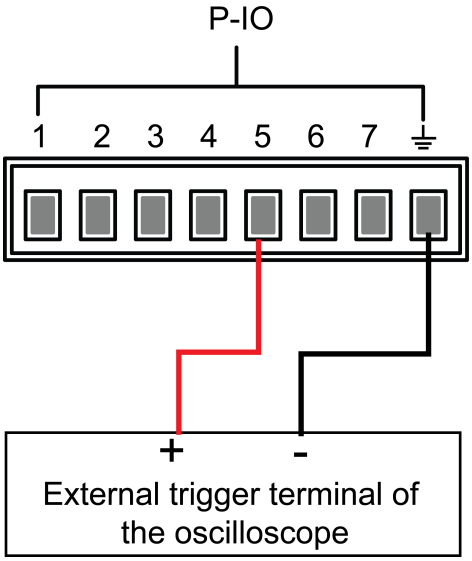


2. Set pin 5's function to **Not-Invert** and**Inhibit→Living**.
3. Set voltage to 10V and turn on **[On/Off]**.
4. Input low level to pin 5.

   At this point, the **[On/Off]** button light is lighted on, and VFD indicator light on the front panel displays **On**, while voltage/current Meter value gradually decreases to 0, the input function is prohibited. In addition, the VFD screen on the front panel displays **INH**.

5. Input high level to pin 5.

   At this point, **[On/Off]** button light is lighted on, and VFD indicator light on the front panel displays **On**, and voltage/current Meter value gradually recovers to 10V, and the input function is re-initiated.

- When pin 5 is set to **Inhibit-Latch** (**Not-Invert**), pin 5 can control the instrument's input state based on the pulse signal from external input. The parameter requirements of this pulse signal are as follows:

| | |
|---|---|
| Level rise slope | 10us |
| Level fall slope | 2us |
| Minimum time width for low level keep | 30us |

– Under default conditions (pin 5 is not connected), it will not effect the instrument's input state.

– If **[On/Off]** is in On state, when pin 5 receives pulse signal, **[On/Off]** will be turned off: The **[On/Off]** button light is lighted off, and the VFD indicator light displays **Off**.

After confirming that the **[On/Off]** can be turned on again, the user needs to manually turn on **[On/Off]**.

1. Referring to the figure below, connect pin 5 to the external oscilloscope.

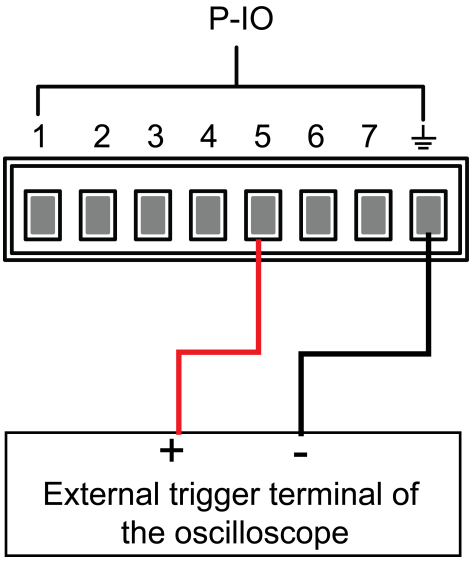


2. Set pin 5's function to **Not-Invert** and**Inhibit→Latch**.
3. Set voltage to 10V and turn on **[On/Off]**.
4. Input pulse signal to pin 5.

   At this point, the **[On/Off]** button light is lighted off, and the VFD indicator light on the front panel displays **Off**, and the input function is switched off. In addition, the VFD screen on the front panel displays **Inhibit-Ps**. When the protection state is cleared, manually turn on **[On/Off]** again.

## 5.11.6 IO–6. Sync-On, Not-Invert

IO-6 pin can be set to 【Sync-On】, 【Input】, 【Output】.

## Parameter Description

| | | | | | |
|---|---|---|---|---|---|
| IO–6. Sync-On, Not-Invert | Parameter setting for pin 6. | | | | |
| | Not-Invert<br>Invert | Indicates whether to invert the input/output pulse or level signal.<br>• Invert: Yes<br>• Not-Invert: No | | | |
| | | Sync-On | This default function means that pin 6 performs bi-directional and synchronous control over the turn-on of **[On/Off]**. | | |
| | | Input | Pin 6 receives the level signal from the outside. | | |
| | | Output | Pin 6 sends the digital signal (1, 0, PWM) to the outside. | | |
| | | | True | By default (**Not-Invert**), the output digital signal is 1 (i.e. low level), and in the case of **Invert**, the output is high level. | |
| | | | False | By default (**Not-Invert**), the output digital signal is 0 (i.e. high level), and in the case of **Invert**, the output is low level. | |
| | | | PWM | Digital signal of PWM. | |
| | | | | PWM Freq | Frequency |
| | | | | PWM Duty | Duty cycle |

## How to Use

When pin 6 is set to default **Sync-On** function, pin 6 has bi-directional I/O function, which can receive pulse signal input from the external instrument and also can output pulse signal to external instrument. The parameter requirements of this pulse signal are as follows:

| | |
|---|---|
| Level rise slope | 10us |
| Level fall slope | 2us |
| Minimum time width for low level keep | 30us |

The bi-direction I/O functions are introduced as below:

- Press **[On/Off]** on the instrument's front panel, the instrument's input is changed from Off to On. At this point, the pulse signal output from pin 6 can be detected.
- When the instrument's **[On/Off]** is in On state, input pulse signal to pin 6, and it will not impact the **[On/Off]** state.
- When the instrument's **[On/Off]** is in Off state, when pulse signal is input to pin 6, the **[On/Off]** will be changed from Off to ON.

Taking two instruments as an example, the operation is as below:

1. Referring to the figure below, connect pin 6 of two instruments to the external oscilloscope.

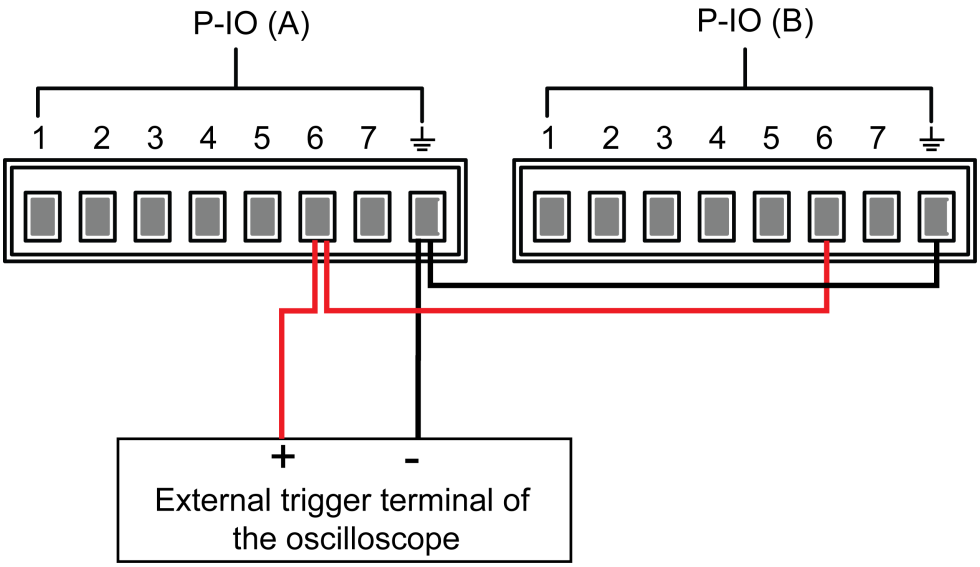


2. Set pin 6's function of two instruments to **Not-Invert** and **Sync-On**.
3. Confirm that the **[On/Off]** of both instruments is in Off state.
4. Set the voltage to 10V on the front panel of instrument A, and turn on **[On/Off]**.

   At this time, check the oscilloscope. The instrument A's pin 6 outputs pulse signal and the instrument B's input function is synchronously turned on.

## 5.11.7 IO–7. Sync-Off, Not-Invert

IO-7 pin can be set to 【Sync-Off】, 【Input】, 【Output】.

### Parameter Description

<table>
<tr><td>IO–7. Sync-Off, Not-Invert</td><td colspan="5">Parameter setting for pin 7.</td></tr>
<tr><td rowspan="9"></td><td>Not-Invert<br>Invert</td><td colspan="4">Indicates whether to invert the input/output pulse or level signal.<br>• Invert: Yes<br>• Not-Invert: No</td></tr>
<tr><td rowspan="8"></td><td>Sync-Off</td><td colspan="3">This default function means that pin 7 performs bi-directional and synchronous control over the turn-off of [On/Off].</td></tr>
<tr><td>Input</td><td colspan="3">Pin 7 receives the level signal from the outside.</td></tr>
<tr><td>Output</td><td colspan="3">Pin 7 sends the digital signal (1, 0, PWM) to the outside.</td></tr>
<tr><td rowspan="5"></td><td>True</td><td colspan="2">By default (Not-Invert), the output digital signal is 1 (i.e. low level), and in the case of Invert, the output is high level.</td></tr>
<tr><td>False</td><td colspan="2">By default (Not-Invert), the output digital signal is 0 (i.e. high level), and in the case of Invert, the output is low level.</td></tr>
<tr><td>PWM</td><td colspan="2">Digital signal of PWM.</td></tr>
<tr><td rowspan="2"></td><td>PWM Freq</td><td>Frequency</td></tr>
<tr><td>PWM Duty</td><td>Duty cycle</td></tr>
</table>

### How to Use

When pin 7 is set to default **Sync-Off** function, pin 7 has bi-directional I/O function, which can receive pulse signal input from the external instrument and also can output pulse signal to external instrument. The parameter requirements of this pulse signal are as follows:

| | |
|---|---|
| Level rise slope | 10us |
| Level fall slope | 2us |
| Minimum time width for low level keep | 30us |

The bi-direction I/O functions are introduced as below:

- Press **[On/Off]** on the instrument's front panel, the instrument's input is changed from On to Off. At this point, the pulse signal output from pin 7 can be detected.
- When the instrument's **[On/Off]** is in Off state, input pulse signal to pin 7, and it will not impact the **[On/Off]** state.
- When the instrument's **[On/Off]** is in On state, input pulse signal to pin 7, and **[On/Off]** will be changed from On to Off.

Taking two instruments as an example, the operation is as below:

1. Referring to the figure below, connect pin 7 of two instruments to the external oscilloscope.

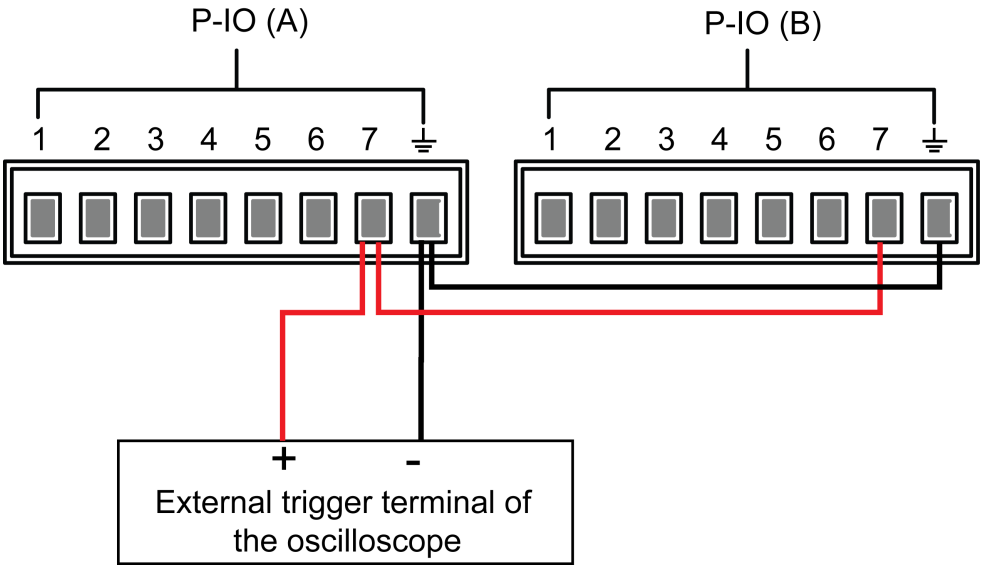


2. Set pin 7's function of two instruments to **Not-Invert** and **Sync-Off**.
3. Confirm that the **[On/Off]** of both instruments is in On state.
4. Press **[On/Off]** on the front panel of instrument A to turn off the input function.

   At this time, check the oscilloscope. The instrument A's pin 7 outputs pulse signal and the instrument B's input function is synchronously turned off.

# 5.12 Analogue Function (Ext-Program) (Optional)

The external analog quantity function means that the user can input an analog signal in the range of 0V-10 V through the analog quantity input interface for remote setting of the instrument's input setting value. The external analog quantity function is not the standard-equipped function for the instrument. It is only available when the user selects the IT-E177 interface card.

The rear panel of this series of instrument provides an optional interface card integrating the RS-232 and analog quantity function. The interface card provides the following capability:

- Remote control of setting values in different modes.
- Remove switching of CC/CV/CR/CW modes.
- Remote monitoring of input voltage/current measurement.
- RS-232 communication interface, please refer to2.5.5 RS–232 Interface (Optional) for detailed description about the interface.

CAUTION

- **Before connecting the hardware device that controls the analog interface, make sure that the hardware device does not output a voltage higher than 20% of the specified value to the pin, otherwise the instrument will be damaged. For example, when setting the voltage or current, the input voltage can't exceed 12V, otherwise the instrument will be damaged.**
- **In analog quantity remote control mode, the analog quantity input pins should be used in combination, and cannot be partially connected and partially left floating.**
- **Safe electrical isolation is set between this analog interface and input electrode. Do not connect any ground wire of the analog interface to the positive and negative terminals of the input interface.**

### Analog Card Interface Introduction

The analog function interface is located on the optional IT-E177. The pins description is as below.

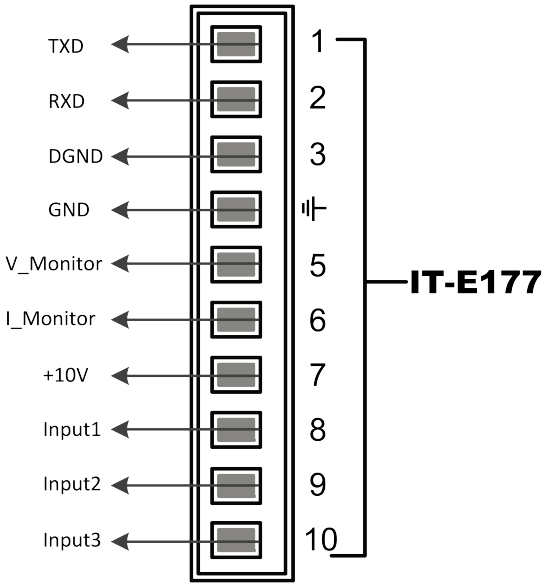


| Pins | Name | Type | Description |
|---|---|---|---|
| 4 | GND | Ground | Ground terminal. |
| 5 | V_Monitor | Analog out | Voltage monitor signal. This pin generates a voltage of 0 V to 10 V to monitor an input voltage of 0 V to the maximum rated value. |
| 6 | I_Monitor | Analog out | Current monitor signal. This pin generates a voltage of 0 V to 10 V to monitor an input current of 0 V to the maximum rated value. |
| 7 | +10V | Analog out | The 10V reference voltage output by the instrument can be connected to a resistance subdivision for analog control. |
| 8 | Input1 | Analog in | Set the input setting value. |

| Pins | Name | Type | Description |
|---|---|---|---|
| 9 | Input2 | Analog in | Set the basic mode of the load. When the input voltage of the pin is ≤ 1V, it is low level. When the input voltage is ≥ 3V, it is high level. Set the load mode with the input voltage and level combination of the Input3: |
| 10 | Input3 | Analog in | Set the basic mode of the load. When the input voltage of the pin is ≤ 1V, it is low level. When the input voltage is ≥ 3V, it is high level. Set the load mode with the input voltage and level combination of the Input2: For detailed mode definition, refer to Input2 description. |

| Input2 | Input3 | Mode |
|---|---|---|
| Low | Low | CC |
| Low | High | CW |
| High | Low | CV |
| High | High | CR |

## Analog quantity menu description

When the analog quantity function is optionally equipped, the system menu displays the analog quantity menu. The analog quantity menu items and parameters are described below:

| Ext-Program | External analog function menu | |
|---|---|---|
| | On / Off | Function switch:<br>• On: Turns on the external analog function. In this state, the channel parameters cannot be set.<br>• Off: Turns off the external analog function. In this state, the channel parameters can be set. |

| | | | |
|---|---|---|---|
| | CV | Calculation parameter setting of the setting value in CV mode. | |
| | | M | Slope coefficient set by voltage. |
| | | b | Offset set by voltage. |
| | CC | Calculation parameter setting of the setting value in CC mode. | |
| | | M | Slope coefficient set by current. |
| | | b | Offset set by current. |
| | CP | Calculation parameter setting of the setting value in CP mode. | |
| | | M | Slope coefficient set by power. |
| | | b | Offset set by power. |
| | CR | Calculation parameter setting of the setting value in CR mode. | |
| | | M | Slope coefficient set by resistance. |
| | | b | Offset set by resistance. |

## Analog Conversion Relationship Introduction

When the analog quantity control function of this series of instrument is used, the user needs to set the conversion relationship of the analog quantity expected value based on requirements. The analog quantity values in each mode all follow the calculation relationship of y=Mx+b. The user needs to set the M (slope coefficient) and b (offset) values in different modes in the analog quantity menu. For calculation of the analog quantity value. The user can calculate the M and b values based on the analog requirements in accordance with the formula below.

Taking the CV program setting as an example, the user needs to convert the M and b values based on the formula below. And set these two values respectively through the front panel keys (or the SCPI remote command).

**Note**

The setting principles of calculation parameters in other modes are the same.

$$M_x = \frac{(V_{out2} - V_{out1})}{(V_{in2} - V_{in1})}$$

$$b = V_{out1} - M \times V_{in1}$$

Formula parameter descriptions:

| Name | Description |
|---|---|
| $V_{in1}$ | Indicates the start voltage input to pin 8. The setting range is from –10 to 10. |
| $V_{in2}$ | Indicates the end voltage input to pin 8. The setting range is from –10 to 10, and $V_{in2} > V_{in1}$. |
| $V_{out1}$ | The starting value of the input voltage in CV mode. |
| $V_{out2}$ | The end value of the input voltage in CV mode, and $V_{out2} > V_{out1}$. |

## Analog Control

The pin connection method and instrument operation method in four basic modes of the load are the same. The voltage control in CV mode is taken as an example below to describe the connection and usage.

1. Refer to the figure below to complete the pin connection.

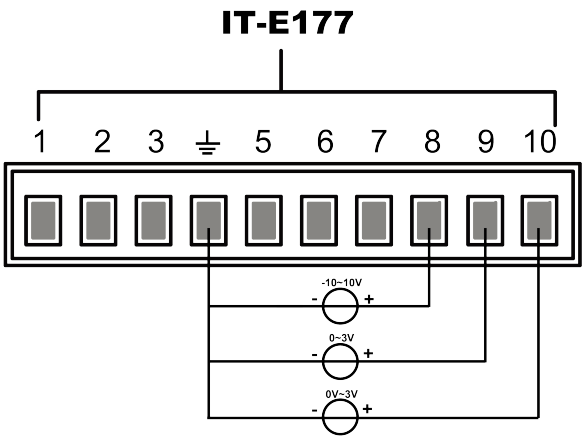


2. Based on the above formula conversion relationship, calculate the M (slope coefficient) and b (offset) values of the voltage setting value.

For example: When the instrument voltage input range is 0-100V, the user needs a 0-10V analog signal to control the setting value of 0-100V. Then, M is: 100–0/10–0=10, and b is: 0–0=0

3. Press the composite keys **[Shift]+[P-set]** (System) on the front panel to enter the system menu.
4. Use knob to select **Ext-Program** and press **[Enter]**.
5. Set the **Ext-Program→On / Off** to **On** to turn on the analog function.
6. Use knob to select the menu item **CV**, and set the **M** and **b** values in CV mode.
7. Input high-level voltage 3V in Pin 9, and input low-level voltage 1V in Pin 10. Switch the existing mode to CV mode. For detailed mode definition, refer to the description of analog quantity interface.
8. Input 0-10V voltage in Pin 8, and control the setting value of the input voltage of this instrument.

   For example, when the input voltage of Pin 8 is 1V, the setting value of the input voltage of this instrument is 10V; when the input voltage of Pin 8 is 5V, the setting value of the input voltage of this instrument is 50V. The corresponding relationship meets the calculation relationship of y=Mx+b.

### Voltage Monitoring and Current Monitoring

The analog interface can monitor the existing input voltage and input current. Connect a digital voltmeter between Pin 5 and Pin 6 of the analog interface and ground wire 4. The connection method is as shown below. The voltage reading from -10 to 10V corresponds to the zero to full-scale voltage/current setting of the instrument. The connection diagram is as shown below.

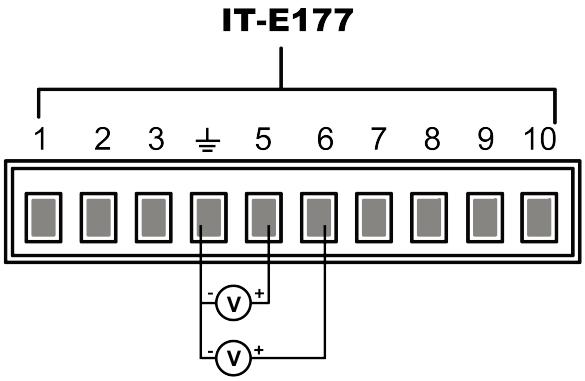


## 5.13 View the System Information (System Info)

This menu item is used to view the system information of the instrument.

The procedures to view the system information are as follows.

1. Press the composite keys **[Shift]+[P-set]** (System) on the front panel to enter the system menu.

2. Turn the knob to select the **System Info** and press **[Enter]**.

   You can use knob to view the following system information.

| Parameter | Description |
|---|---|
| Model | Display the instrument model. |
| SN | Display the serial number. |
| Main Ver | Display the system version information. |
| Ctrl1 Ver | Display the version information of the control panel 1. |
| Ctrl2 Ver | Display the version information of the control panel 2. |
| Date | Display the system time. |
| Voltage Max | Display the maximum voltage value. |
| Voltage Min | Display the minimum voltage value. |
| Current Max | Display the maximum current value. |
| Current Min | Display the minimum current value. |
| Power Max | Display the maximum power value. |
| Power Min | Display the minimum power value. |
| Resistance Max | Display the maximum resistance value. |
| Resistance Min | Display the minimum resistance value. |
| Current Limit | Display the maximum current limit. |
| Run Time | Display the power-on time. |

# 5.14 Restored to Factory Setting (System Reset)

This menu item is used to restore some parameter settings to factory setting values.

The procedures to set the menu item are as follows.

1. Press the composite keys **[Shift]+[P-set]** (System) on the front panel to enter the system menu.
2. Turn the knob to select the **System Reset** and press **[Enter]**.

3. Press the Left / Right key or turn the knob to adjust the value of this parameter.
   - No: Default value, indicates the instrument cancels this menu setting.
   - Yes: Indicates the instrument restores the factory default settings.
4. After the parameter settings are complete, press **[Enter]**.

   The parameters affected by **System Reset** and the parameter values after reset are shown in the following table.

**Table 5–2 Initial value of the parameter**

| Category | Parameter | Initial Value |
|---|---|---|
| Main interface | Voltage setting under CV mode: Vs | Rated voltage of the instrument |
| | Current setting under CC mode: Is | 0A |
| | Power setting under CW mode: Ps | 0W |
| | Resistance setting under CR mode: Rs | Rated maximum resistance value of the instrument |
| | Voltage setting under CVCC mode: Vs | Rated voltage of the instrument |
| | Current setting under CVCC mode: Is | 0A |
| | Voltage setting under CVCR mode: Vs | Rated voltage of the instrument |
| | Resistance setting under CVCR mode: Rs | Rated maximum resistance value of the instrument |
| | Current setting under CRCC mode: Is | 0A |
| | Resistance setting under CRCC mode: Rs | Rated maximum resistance value of the instrument |
| | Voltage setting under AUTO mode: Vs | Rated voltage of the instrument |
| | Current setting under AUTO mode: Is | 0A |

Copyright © Itech Electronic Co., Ltd.

| Category | Parameter | Initial Value |
|---|---|---|
| | Power setting under AUTO mode: Ps | 0W |
| | Resistance setting under AUTO mode: Rs | Rated maximum resistance value of the instrument |
| | On/Off state | Off |
| System menu | Beep | On |
| | PowerOn | Reset |
| | Sense | Off |
| | ListTrig Source | Manual |
| | DataLogger Trig Source | Manual |
| | I/O | USB-VCP |
| | Digital Port | • IO–1: Ps-Clear<br>• IO–2: Ps<br>• IO–3: Off-Status<br>• IO–4: Ext-Trig<br>• IO–5: INH-Living<br>• IO–6: Sync-On<br>• IO–7: Sync-Off |
| | Parallel | Single |
| | Display on timer | Off |
| | Display on timer | Off |
| Config menu | Operation mode | CC |
| | I-Rise Slope | 3.600A/ms |
| | I-Fall Slope | 3.600A/ms |
| | Von mode | Latch |
| | Von level | 0V |
| | On Delay/Off Delay | 0s |
| Protect menu | OCP/OPP/UVP Status switch | Off |

| Category | Parameter | Initial Value |
|---|---|---|
| | OCP/OPP Protection point: Level | Rated current and power value of the instrument |
| | UVP Protection point: Level | 0 |
| | OCP/OPP/UVP Delay time: Delay | 60s |
| | UVP Warm time: Warm-up | 0s |

# 5.15 Observe Power Grid Information (AC-Meter)

The regenerative power value can be observed on the front panel , including voltage, frequency and power, as well as total power, total current regenerative and total historical regenerative power.

The procedures to view the power grid information are as follows.

1. Press the composite keys **[Shift]+[P-set]** (System) on the front panel to enter the system menu.
2. Turn the knob to select the **AC-Meter** and press **[Enter]**.
3. Press the Left / Right key or turn the knob to adjust the value of this parameter.
   - **Display**: Display the current regenerative power value.
   - **Clear**: Clear the total current regenerative power value and exit the function.
4. After the parameter settings are complete, press **[Enter]**.

   If you select **Display** and press **[Enter]** key, the interface will display the voltage, frequency and power value. Press **[Esc]** key twice to exit the function.

# 5.16 Display Loading Time (Disp on timer)

The user can turn the loading time display on or off base on personal requirement.

The setting procedures are as follows:

1. Press the composite keys **[Shift]+[P-set]** (System) on the front panel to enter the system menu.
2. Turn the knob to select the **Disp on timer** and press **[Enter]**。
3. Press the Left / Right key or turn the knob to adjust the value of this parameter.
   - On: indicates the display is on.
   - Off: indicates the beeper is off.
4. After the parameter settings are complete, press **[Enter]**.

# 5.17 System Upgrade

This series load supports the upgrade of the system version. System upgrade includes the following two methods:

- During the start-up period after the instrument is powered on, through the USB interface on the front panel, select the system upgrading files in the memory device (USB flash drive) for upgrading.
- The user can access to the Web service programs in the instrument by the Web browser on PC for upgrading operation.

This Chapter introduces in detail how to upgrade the system with the USB interface on the front panel. For the upgrading method of Web, see 2.5.2.1 Using Web Server.

## Before You Upgrade

Before upgrading, you need to note the following points:

1. Description about system upgrading files.

   Before upgrading, please contact ITECH technical staff to obtain the following two upgrading files, and put them under the root directory of the USB flash drive.

   - `itech_3900_P.itech`

     System upgrading package postfixed with **.itech**.

   - `ItechConfig.txt`

     System upgrading configuration file in text format. Before performing the upgrade, you need to open the configuration file with a text editing tool to confirm that the system upgrade package name in the configuration file is consistent with the present upgrading package name.

For example, when there are multiple system upgrading package post-fixed with **.itech** in the root directory of your USB flash drive, you need to use a text editing tool to open the configuration file and specify the upgrade package name corresponding to the present upgrade operation.

2. The upgrading methods for single unit or units in parallel are slightly different: Under the parallel mode, the user can select to upgrade all units or a single unit only by operating the master. Therefore, the user needs to get access to SN numbers of all instruments in the parallel network (To obtain the unique ID for identifying instrument, see 5.13 View the System Information (System Info)) for selective upgrading based on the SN number in subsequent upgrades.
3. If the upgrade fails, the interface will prompt **Update fail**. At this point, you cannot use the instrument. Please contact ITECH technical staff for treatment.

## Upgrade Operation

- System Upgrade under Single-unit Mode

1. Insert the USB flash drive into the USB interface on the front panel of the instrument.
2. Power on the instrument. At this point, press **Shift** for several times till the instrument can detect the system upgrading files in the USB flash drive.

   After the system upgrading files are detected, the interface displays as follows:

   ```
   Update Select(01/01)
   SN: ALL
   ```

   **Note**

   If the USB flash drive is not detected, select **Yes** to detect again; if **No** is selected, it means to exit upgrading, and the system will directly enter into the main interface.

3. Select **ALL**, and press **[Enter]**.

   The system interface displays as follows:

   ```
   Update ? (01/01)
   No       Yes
   ```

4. Select **Yes**, and press **[Enter]**.

   The system will automatically perform upgrading.

**Note**

If **No** is selected, it means to exit upgrading, and the system will directly enter into the main interface.

5. After the upgrading is completed, you need to restart the instrument manually.

- System Upgrade under Parallel Mode (Only Need to Operate the Master)

1. Insert the USB flash drive into the USB interface on the front panel of the instrument.
2. Power on the instrument. At this point, press **Shift** for several times till the instrument can detect the system upgrading files in the USB flash drive.

   After the system upgrading files are detected, the interface displays as follows:

   ```
   Update Select(xx/yy)
   SN: ALL
   ```

   xx means the number of selected instruments to be upgraded, and yy means the number of instruments in the parallel network.

3. Select upgrade in whole or in part based on actual needs. Then, press **[Enter]**.
   - SN: ALL

     Indicates to upgrade all.
   - SN1: xxxxxxxxxxxxxxxxxx

     Indicates to upgrade the selected instrument. Rotate the knob to check the SNs of all instruments in the parallel network; press Right to select the instrument; and press Right again to deselect the instrument.
4. Select **Yes**, and press **[Enter]**.

   The system will automatically perform upgrading.

   **Note**

   If **No** is selected, it means to exit upgrading, and the system will directly enter into the main interface.

5. After the upgrading is completed, you need to restart the instrument manually.

# 6 Technical Specification

This chapter will introduce the main technical parameters of this load , such as rated voltage/current/power and so on. Besides, we will introduce the working environment and storage temperature.


- Main Specification
- IT-M3801-10-120
- IT-M3802-10-240
- IT-M3803-10-360
- IT-M3807-10-720
- IT-M3806-80-120
- IT-M3812-80-240
- IT-M3806-300-60
- Supplemental Characteristics


## 6.1 Main Specification

# 6.1.1 IT-M3801-10-120

| Parameter | | IT-M3801-10-120 |
|---|---|---|
| Rated value | Voltage | 0 ~ 10V |
| | Current | 3A ~ 120A |
| | Power | 12W ~ 1200W |
| | Resistance | 0.009Ω ~ 3Ω |
| | Min. operating voltage | 0.6V at 120A |
| | Input leakage current | 0.01A |
| Setup Resolution | Voltage | 0.001V |
| | Current | 0.1A |
| | Power | 0.1W |
| | Resistance | 0.001Ω |
| Read Back Resolution | Voltage | 0.001V |
| | Current | 0.1A |
| | Power | 0.1W |
| Setup Accuracy | Voltage | ≤0.03% + 0.03%FS |
| | Current | ≤0.1% + 0.1%FS |
| | Power | ≤0.5% + 0.5%FS |
| | Resistance (1) | Lower limit: 1/(1/Rset+(1/Rset)*0.2+0.008) Upper limit: 1/(1/Rset-(1/Rset)*0.2-0.008) |
| Read Back Accuracy | Voltage | ≤0.03% + 0.03%FS |
| | Current | ≤0.1% + 0.1%FS |
| | Power | ≤0.5% + 0.5%FS |
| Setup Temperature Coefficient | Voltage | ≤50ppm/℃ |
| | Current | ≤50ppm/℃ |
| Read Back Temper-ature Coefficient | Voltage | ≤50ppm/℃ |
| | Current | ≤50ppm/℃ |
| Transient Response Time | Rising slope | 120A/ms |
| | Falling slope | 120A/ms |
| | Dynamic Frequency | 100Hz |
| Line Regulation | Voltage | ≤0.05% + 0.05%FS |
| | Current | ≤0.05% + 0.05%FS |

| Parameter | | IT-M3801-10-120 |
|---|---|---|
| Load Regulation | Voltage | ≤0.002%*I + 0.05%FS |
| | Current | ≤0.05% + 0.05%FS |
| Short-circuit test | Current | 122A |
| Output protection | OCP | 125A |
| | Overpower protection | 1224W |
| OVP | 11V | |
| Remote Sense Compensation Voltage | ≤2V | |
| External analog ( optional ) | current program | External programming voltage 0V to 10V corresponds to current 0A to 170A (effective range 0A to 120A) |
| | current monitor | Current 0A to 170A corresponds to external monitoring voltage 0V to 10V (effective range 0A to 120A) |
| | voltage program | External programming voltage 0 to 10V Corresponding voltage 0 to 10V |
| | voltage monitor | Voltage 0 to 10V corresponds to external monitoring voltage 0 to 10V |
| Note: (1) The voltage/current input is no less than 10%FS. | | |

**Other parameters:**

| | | |
|---|---|---|
| AC Input | Voltage | 3 phase: 110V ~ 520V |
| | | Single phase: 85V ~ 300V |
| | Frequency | 50Hz/60Hz |
| Max. apparent power | 1.85kVA | |
| Max. input current | 12.5Aac1 | |
| Max. efficiency | 92% | |
| Power Factor | 0.99 | |
| DC component | ≤0.2A | |
| Current harmonics | ≤3% | |
| Standard Interface | Standard: USB/LAN/CAN/IO<br>Optional: GPIB/Analog/RS232 | |
| Command Response Time | 0.1ms | |

| | |
|---|---|
| Parallel Number | ≤16 |
| Working Temperature | 0 ~ 40℃ |
| Storage Temperature | -10℃ ~ 70℃ |
| IP | IP20 |
| Isolation DC to GND | 300Vdc |
| Isolation AC to GND | 3500Vdc |
| Cooling | Air |
| Dimension ( mm) | 660mm*437mm*43.5mm |
| Weight( net) | 10kg |

## 6.1.2 IT-M3802-10-240

| Parameter | | IT-M3802-10-240 |
|---|---|---|
| Rated value | Voltage | 0 ~ 10V |
| | Current | 4A ~ 240A |
| | Power | 40W ~ 2400W |
| | Resistance | 0.006Ω ~ 2Ω |
| | Min. operating voltage | 0.6V at 240A |
| | Input leakage current | 0.01A |
| Setup Resolution | Voltage | 0.001V |
| | Current | 0.1A |
| | Power | 0.1W |
| | Resistance | 0.001Ω |
| Read Back Resolution | Voltage | 0.001V |
| | Current | 0.1A |
| | Power | 0.1W |
| Setup Accuracy | Voltage | ≤0.03% + 0.03%FS |
| | Current | ≤0.1% + 0.1%FS |
| | Power | ≤0.5% + 0.5%FS |
| | Resistance (1) | Lower limit：1/(1/Rset+(1/Rset)*0.2 +0.008)<br>Upper limit：1/(1/Rset-(1/Rset)*0.2-0.008) |
| Read Back Accuracy | Voltage | ≤0.03% + 0.03%FS |

| Parameter | | IT-M3802-10-240 |
|---|---|---|
| | Current | ≤0.1% + 0.1%FS |
| | Power | ≤0.5% + 0.5%FS |
| Setup Temperature Coefficient | Voltage | ≤50ppm/℃ |
| | Current | ≤50ppm/℃ |
| Read Back Temperature Coefficient | Voltage | ≤50ppm/℃ |
| | Current | ≤50ppm/℃ |
| Transient Response Time | Rising slope | 240A/ms |
| | Falling slope | 240A/ms |
| | Dynamic Frequency | 100Hz |
| Line Regulation | Voltage | ≤0.05% + 0.05%FS |
| | Current | ≤0.05% + 0.05%FS |
| Load Regulation | Voltage | ≤0.002%*I + 0.05%FS |
| | Current | ≤0.05% + 0.05%FS |
| Short-circuit test | Current | 245A |
| Output protection | OCP | 250A |
| | Overpower protection | 2448W |
| OVP | 11V | |
| Remote Sense Compensation Voltage | ≤2V | |
| External analog ( optional ) | current program | External programming voltage 0V to 10V corresponds to current 0A to 340A (effective range 0A to 240A) |
| | current monitor | Current 0A to 340A corresponds to external monitoring voltage 0V to 10V (effective range 0A to 240A) |
| | voltage program | External programming voltage 0 to 10V Corresponding voltage 0 to 10V |
| | voltage monitor | Voltage 0 to 10V corresponds to external monitoring voltage 0 to 10V |
| Note: (1) The voltage/current input is no less than 10%FS. | | |

**Other parameters:**

| | | |
|---|---|---|
| AC Input | Voltage | 3phase 110V ~ 520V |
| | | Single phase 85V ~ 300V |
| | Frequency | 50/60Hz |

| | |
|---|---|
| Max. apparent power | 3.7kVA |
| Max. input current | 12.5A |
| Max. efficiency | 92% |
| Power Factor | 0.99 |
| DC component | ≤0.2A |
| Current harmonics | ≤3% |
| Standard Interface | Standard: USB/LAN/CAN/IO Optional: GPIB/Analog/RS232 |
| Command Response Time | 0.1ms |
| Parallel Number | ≤16 |
| Working Temperature | 0 ~ 40℃ |
| Storage Temperature | -10℃ ~ 70℃ |
| IP | IP20 |
| Isolation DC to GND | 300Vdc |
| Isolation AC to GND | 3500Vdc |
| Cooling | Air |
| Dimension ( mm) | 660mm*437mm*43.5mm |
| Weight( net) | 12.5kg |

## 6.1.3 IT-M3803-10-360

| Parameter | | IT-M3803-10-360 |
|---|---|---|
| Rated value | Voltage | 0 ~ 10V |
| | Current | 6 ~ 360A |
| | Power | 60 ~ 3600W |
| | Resistance | 0.003Ω ~ 1Ω |
| | Min. operating voltage | 0.6V at 360A |
| | Input leakage current | 0.03A |
| Setup Resolution | Voltage | 0.001V |
| | Current | 0.1A |
| | Power | 0.1W |
| | Resistance | 0.001Ω |
| Read Back Resolution | Voltage | 0.001V |
| | Current | 0.1A |

| Parameter | | IT-M3803-10-360 |
|---|---|---|
| | Power | 0.1W |
| Setup Accuracy | Voltage | ≤0.03% + 0.03%FS |
| | Current | ≤0.1% + 0.1%FS |
| | Power | ≤0.5% + 0.5%FS |
| | Resistance (1) | Lower limit：1/(1/Rset+(1/Rset)*0.1 +0.008)<br>Upper limit：1/(1/Rset-(1/Rset)*0.1-0.008) |
| Read Back Accuracy | Voltage | ≤0.03% + 0.03%FS |
| | Current | ≤0.1% + 0.1%FS |
| | Power | ≤0.5% + 0.5%FS |
| Setup Temperature Coefficient | Voltage | ≤50ppm/℃ |
| | Current | ≤50ppm/℃ |
| Read Back Temperature Coefficient | Voltage | ≤50ppm/℃ |
| | Current | ≤50ppm/℃ |
| Transient Response Time | Rising slope | 120A/ms |
| | Falling slope | 120A/ms |
| | Dynamic Frequency | 100Hz |
| Line Regulation | Voltage | ≤0.05% + 0.05%FS |
| | Current | ≤0.05% + 0.05%FS |
| Load Regulation | Voltage | ≤0.002%*I + 0.05%FS |
| | Current | ≤0.05% + 0.05%FS |
| Short-circuit test | Current | 366A |
| Output protection | OCP | 375A |
| | Overpower protection | 3672W |
| OVP | 11V | |
| Remote Sense Compensation Voltage | ≤2V | |
| External analog ( optional ) | current program | External programming voltage 0V to 10V corresponds to current 0A to 510A (effective range 0A to 360A) |
| | current monitor | Current 0A to 510A corresponds to external monitoring voltage 0V to 10V (effective range 0A to 360A) |
| | voltage program | External programming voltage 0 to 10V Corresponding voltage 0 to 10V |

| Parameter | | IT-M3803-10-360 |
|---|---|---|
| | voltage monitor | Voltage 0 to 10V corresponds to external monitoring voltage 0 to 10V |
| Note: (1) The voltage/current input is no less than 10%FS. | | |

**Other parameters:**

| | | |
|---|---|---|
| AC Input | Voltage | 3phase 110V ~ 520V |
| | | Single phase 85V ~ 300V |
| | Frequency | 50/60Hz |
| Max. apparent power | 5.55kVA | |
| Max. input current | 12.5Aac | |
| Max. efficiency | 92% | |
| Power Factor | 0.99 | |
| DC component | ≤0.2A | |
| Current harmonics | ≤3% | |
| Standard Interface | Standard: USB/LAN/CAN/IO Optional: GPIB/Analog/RS232 | |
| Command Response Time | 0.1ms | |
| Parallel Number | ≤16 | |
| Working Temperature | 0 ~ 40℃ | |
| Storage Temperature | -10℃ ~ 70℃ | |
| IP | IP20 | |
| Isolation DC to GND | 300Vdc | |
| Isolation AC to GND | 3500Vdc | |
| Cooling | Air | |
| Dimension ( mm) | 660mm*437mm*43.5mm | |
| Weight( net) | 15kg | |

Copyright © Itech Electronic Co., Ltd.

# 6.1.4 IT-M3807-10-720

| Parameter | | IT-M3807-10-720 |
|---|---|---|
| Rated value | Voltage | 0 ~ 10V |
| | Current | 12A ~ 720A |
| | Power | 120W ~ 7200W |
| | Resistance | 0.0015Ω ~ 0.5Ω |
| | Min. operating voltage | 0.6V at 720A |
| | Input leakage current | 0.03A |
| Setup Resolution | Voltage | 0.001V |
| | Current | 0.1A |
| | Power | 0.1W |
| | Resistance | 0.001Ω |
| Read Back Resolution | Voltage | 0.001V |
| | Current | 0.1A |
| | Power | 0.1W |
| Setup Accuracy | Voltage | ≤0.03% + 0.03%FS |
| | Current | ≤0.1% + 0.1%FS |
| | Power | ≤0.5% + 0.5%FS |
| | Resistance (1) | Lower limit: 1/(1/Rset+(1/Rset)*0.1+0.008) Upper limit: 1/(1/Rset-(1/Rset)*0.1-0.008) |
| Read Back Accuracy | Voltage | ≤0.03% + 0.03%FS |
| | Current | ≤0.1% + 0.1%FS |
| | Power | ≤0.5% + 0.5%FS |
| Setup Temperature Coefficient | Voltage | ≤50ppm/℃ |
| | Current | ≤50ppm/℃ |
| Read Back Temper-ature Coefficient | Voltage | ≤50ppm/℃ |
| | Current | ≤50ppm/℃ |
| Transient Response Time | Rising slope | 120A/ms |
| | Falling slope | 120A/ms |
| | Dynamic Frequency | 100Hz |
| Line Regulation | Voltage | ≤0.05% + 0.05%FS |
| | Current | ≤0.05% + 0.05%FS |

| Parameter | | IT-M3807-10-720 |
|---|---|---|
| Load Regulation | Voltage | ≤0.002%*I + 0.05%FS |
| | Current | ≤0.05% + 0.05%FS |
| Short-circuit test | Current | 732A |
| Output protection | OCP | 750A |
| | Overpower protection | 7344W |
| OVP | 11V | |
| Remote Sense Compensation Voltage | ≤2V | |
| External analog ( optional ) | current program | External programming voltage 0V to 10V corresponds to current 0A to 1020A (effective range 0A to 720A) |
| | current monitor | Current 0A to 1020A corresponds to external monitoring voltage 0V to 10V (effective range 0A to 720A) |
| | voltage program | External programming voltage 0 to 10V Corresponding voltage 0 to 10V |
| | voltage monitor | Voltage 0 to 10V corresponds to external monitoring voltage 0 to 10V |
| Note: (1) The voltage/current input is no less than 10%FS. | | |

**Other parameters:**

| | | |
|---|---|---|
| AC Input | Voltage | 3phase 110V ~ 520V |
| | | Single phase 85V ~ 300V |
| | Frequency | 50/60Hz |
| Max. apparent power | 11.0kVA | |
| Max. input current | 25Aac | |
| Max. efficiency | 92% | |
| Power Factor | 0.99 | |
| DC component | ≤0.2A | |
| Current harmonics | ≤3% | |
| Standard Interface | Standard: USB/LAN/CAN/IO<br>Optional: GPIB/Analog/RS232 | |
| Command Response Time | 0.1ms | |

| | |
|---|---|
| Parallel Number | ≤8 |
| Working Temperature | 0 ~ 40℃ |
| Storage Temperature | -10℃ ~ 70℃ |
| IP | IP20 |
| Isolation DC to GND | 300Vdc |
| Isolation AC to GND | 3500Vdc |
| Cooling | Air |
| Dimension ( mm) | 660mm*437mm*87mm |
| Weight( net) | 30kg |

## 6.1.5 IT-M3806-80-120

| Parameter | | IT-M3806-80-120 |
|---|---|---|
| Rated value | Voltage | 0 ~ 80V |
| | Current | 0 ~ 120A |
| | Power | 0 ~ 6000W |
| | Resistance* | 0.01Ω ~ 800Ω |
| | Min. operating voltage | 0.8V at 120A |
| | Input leakage current | 0.01A |
| Setup Resolution | Voltage | 0.001V |
| | Current | 0.01A |
| | Power | 0.1W |
| | Resistance | 0.01Ω |
| Read Back Resolution | Voltage | 0.001V |
| | Current | 0.01A |
| | Power | 0.1W |
| Setup Accuracy | Voltage | ≤0.03% + 0.03%FS |
| | Current | ≤0.1% + 0.1%FS |
| | Power | ≤0.5% + 0.5%FS |
| | Resistance (1) | Lower limit: 1/(1/Rset+(1/Rset)*0.05+0.0005)<br>Upper limit: 1/(1/Rset-(1/Rset)*0.05-0.0005) |

| Parameter | | IT-M3806-80-120 |
|---|---|---|
| Read Back Accuracy | Voltage | ≤0.03% + 0.03%FS |
| | Current | ≤0.1% + 0.1%FS |
| | Power | ≤0.5% + 0.5%FS |
| Setup Temperature Coefficient | Voltage | ≤50ppm/℃ |
| | Current | ≤50ppm/℃ |
| Read Back Temperature Coefficient | Voltage | ≤50ppm/℃ |
| | Current | ≤50ppm/℃ |
| Transient Response Time | Rising slope | 120A/ms |
| | Falling slope | 120A/ms |
| | Dynamic Frequency | 500Hz |
| Line Regulation | Voltage | ≤0.01% + 0.01%FS |
| | Current | ≤0.05% + 0.05%FS |
| Load Regulation | Voltage | ≤0.01% + 0.01%FS |
| | Current | ≤0.05% + 0.05%FS |
| Short-circuit test | Current | 122.4A |
| Output protection | OCP | 125A |
| | Overpower protection | 6120W |
| OVP | 85V | |
| Remote Sense Compensation Voltage | ≤2V | |
| External analog ( optional ) | current program | External programming voltage 0 to 10V Corresponding current 0 to 120A |
| | current monitor | Current 0A to 120A corresponds to external monitoring voltage 0V to 10V |
| | voltage program | External programming voltage 0 to 80V Corresponding voltage 0 to 10V |
| | voltage monitor | Voltage 0 to 80V corresponds to external monitoring voltage 0 to 10V |
| Note: (1) The voltage/current input is no less than 10%FS. | | |

**Other parameters:**

| | | |
|---|---|---|
| AC Input | Voltage | 3phase 110V ~ 520V |
| | | Single phase 85V ~ 300V |

| | | |
|---|---|---|
| | Frequency | 50/60Hz |
| Max. apparent power | 6.5kVA | |
| Max. input current | 12.5Aac | |
| Max. efficiency | 92% | |
| Power Factor | 0.99 | |
| DC component | ≤0.2A | |
| Current harmonics | ≤3% | |
| Standard Interface | Standard: USB/LAN/CAN/IO Optional: GPIB/Analog/RS232 | |
| Command Response Time | 0.1ms | |
| Parallel Number | ≤16 | |
| Working Temperature | 0 ~ 40℃ | |
| Storage Temperature | -10℃ ~ 70℃ | |
| IP | IP20 | |
| Isolation DC to GND | 300Vdc | |
| Isolation AC to GND | 3500Vdc | |
| Cooling | Air | |
| Dimension ( mm) | 660mm*437mm*43.5mm | |
| Weight( net) | 15kg | |

## 6.1.6 IT-M3812-80-240

| Parameter | | IT-M3812-80-240 |
|---|---|---|
| Rated value | Voltage | 0 ~ 80V |
| | Current | 0 ~ 240A |
| | Power | 0 ~ 12000W |
| | Resistance* | 0.005Ω ~ 400Ω |
| | Min. operating voltage | 0.8V at 240A |
| | Input leakage current | 0.01A |
| Setup Resolution | Voltage | 0.001V |

| Parameter | | IT-M3812-80-240 |
|---|---|---|
| | Current | 0.01A |
| | Power | 0.1W |
| | Resistance | 0.01Ω |
| Read Back Resolution | Voltage | 0.001V |
| | Current | 0.01A |
| | Power | 0.1W |
| Setup Accuracy | Voltage | ≤0.03% + 0.03%FS |
| | Current | ≤0.1% + 0.1%FS |
| | Power | ≤0.5% + 0.5%FS |
| | Resistance (1) | Lower limit: 1/(1/Rset+(1/Rset)*0.05+0.0005)<br>Upper limit: 1/(1/Rset-(1/Rset)*0.05-0.0005) |
| Read Back Accuracy | Voltage | ≤0.03% + 0.03%FS |
| | Current | ≤0.1% + 0.1%FS |
| | Power | ≤0.5% + 0.5%FS |
| Setup Temperature Coefficient | Voltage | ≤50ppm/℃ |
| | Current | ≤50ppm/℃ |
| Read Back Temperature Coefficient | Voltage | ≤50ppm/℃ |
| | Current | ≤50ppm/℃ |
| Transient Response Time | Rising slope | 240A/ms |
| | Falling slope | 240A/ms |
| | Dynamic Frequency | 500Hz |
| Line Regulation | Voltage | ≤0.01% + 0.01%FS |
| | Current | ≤0.05% + 0.05%FS |
| Load Regulation | Voltage | ≤0.01% + 0.01%FS |
| | Current | ≤0.05% + 0.05%FS |
| Short-circuit test | Current | 244.8A |
| Output protection | OCP | 250A |
| | Overpower protection | 12240W |
| OVP | 85V | |
| Remote Sense Compensation Voltage | ≤2V | |
| External analog ( optional ) | current program | External programming voltage 0 to 10V Corresponding current 0 to 240A |

| Parameter | | IT-M3812-80-240 |
|---|---|---|
| | current monitor | Current 0A to 240A corresponds to external monitoring voltage 0V to 10V |
| | voltage program | External programming voltage 0 to 80V Corresponding voltage 0 to 10V |
| | voltage monitor | Voltage 0 to 80V corresponds to external monitoring voltage 0 to 10V |
| Note: (1) The voltage/current input is no less than 10%FS. | | |

**Other parameters:**

| | | |
|---|---|---|
| AC Input | Voltage | 3phase 110V ~ 520V |
| | | Single phase 85V ~ 300V |
| | Frequency | 50/60Hz |
| Max. apparent power | 13kVA | |
| Max. input current | 25Aac | |
| Max. efficiency | 92% | |
| Power Factor | 0.99 | |
| DC component | ≤0.2A | |
| Current harmonics | ≤3% | |
| Standard Interface | Standard: USB/LAN/CAN/IO Optional: GPIB/Analog/RS232 | |
| Command Response Time | 0.1ms | |
| Parallel Number | ≤16 | |
| Working Temperature | 0 ~ 40℃ | |
| Storage Temperature | -10℃ ~ 70℃ | |
| IP | IP20 | |
| Isolation DC to GND | 300Vdc | |
| Isolation AC to GND | 3500Vdc | |
| Cooling | Air | |
| Dimension ( mm) | 660mm*437mm*87mm | |
| Weight( net) | 30kg | |

Copyright © Itech Electronic Co., Ltd.

# 6.1.7 IT-M3806-300-60

| Parameter | | IT-M3806-300-60 |
|---|---|---|
| Rated value | Voltage | 0 ~ 300V |
| | Current | 0 ~ 60A |
| | Power | 0 ~ 6000W |
| | Resistance* | 0.05Ω ~ 3000Ω |
| | Min. operating voltage | 3V at 60A |
| | Input leakage current | 0.01A |
| Setup Resolution | Voltage | 0.001V |
| | Current | 0.01A |
| | Power | 0.1W |
| | Resistance | 0.01Ω |
| Read Back Resolution | Voltage | 0.001V |
| | Current | 0.01A |
| | Power | 0.1W |
| Setup Accuracy | Voltage | ≤0.03% + 0.03%FS |
| | Current | ≤0.1% + 0.1%FS |
| | Power | ≤0.5% + 0.5%FS |
| | Resistance (1) | Lower limit：1/(1/Rset+(1/Rset)*0.05+0.0001)<br>Upper limit：1/(1/Rset-(1/Rset)*0.05-0.0001) |
| Read Back Accuracy | Voltage | ≤0.03% + 0.03%FS |
| | Current | ≤0.1% + 0.1%FS |
| | Power | ≤0.5% + 0.5%FS |
| Setup Temperature Coefficient | Voltage | ≤50ppm/℃ |
| | Current | ≤50ppm/℃ |
| Read Back Temper-ature Coefficient | Voltage | ≤50ppm/℃ |
| | Current | ≤50ppm/℃ |
| Transient Response Time | Rising slope | 60A/ms |
| | Falling slope | 60A/ms |
| | Dynamic Frequency | 500Hz |
| Line Regulation | Voltage | ≤0.01% + 0.01%FS |
| | Current | ≤0.05% + 0.05%FS |

| Parameter | | IT-M3806-300-60 |
|---|---|---|
| Load Regulation | Voltage | ≤0.01% + 0.01%FS |
| | Current | ≤0.05% + 0.05%FS |
| Short-circuit test | Current | 62A |
| Output protection | OCP | 63A |
| | Overpower protection | 6120W |
| OVP | 330V | |
| Remote Sense Compensation Voltage | ≤3V | |
| External analog ( optional ) | current program | External programming voltage 0 to 10V Corresponding current 0 to 60A |
| | current monitor | Current 0A to 60A corresponds to external monitoring voltage 0V to 10V |
| | voltage program | External programming voltage 0 to 300V Corresponding voltage 0 to 10V |
| | voltage monitor | Voltage 0 to 300V corresponds to external monitoring voltage 0 to 10V |
| Note: (1) The voltage/current input is no less than 10%FS. | | |

**Other parameters:**

| | | |
|---|---|---|
| AC Input | Voltage | 3phase 110V ~ 520V |
| | | Single phase 85V ~ 300V |
| | Frequency | 50/60Hz |
| Max. apparent power | 6.5kVA | |
| Max. input current | 12.5Aac | |
| Max. efficiency | 94.5% | |
| Power Factor | 0.99 | |
| DC component | ≤0.2A | |
| Current harmonics | ≤3% | |
| Standard Interface | Standard: USB/LAN/CAN/IO Optional: GPIB/Analog/RS232 | |
| Command Response Time | 0.1ms | |
| Parallel Number | ≤16 | |

| | |
|---|---|
| Working Temperature | 0 ~ 40℃ |
| Storage Temperature | -10℃ ~ 70℃ |
| IP | IP20 |
| Isolation DC to GND | 600Vdc |
| Isolation AC to GND | 3500Vdc |
| Cooling | Air |
| Dimension ( mm) | 660mm*437mm*43.5mm |
| Weight( net) | 15kg |

**Note**

* At low voltage input, the set power will decrease. For more information, please contact ITECH.

# 6.8 Supplemental Characteristics

State storage capacity: 10 sets

Recommended calibration frequency: once a year

Cooling style: fans

Copyright © Itech Electronic Co., Ltd.

# 7 Routine Maintenance

This chapter describes the general maintenance items and maintenance methods of the device.

♦ Instrument Self-Test
♦ Cleaning and Maintenance
♦ Contact of ITECH Engineers
♦ Return for Repair

## 7.1 Instrument Self-Test

Self-test checks that the minimum set of logic and power mesh systems are functioning properly. Self-test does not enable the input or place any voltages on the input. Self-test can be achieved in two ways:

- Re-start the instrument. Each time the instrument is powered on, the self-test is performed. This test assumes that the instrument is running.
- SCPI command: *TST?. If the return value is 0, the self-test passes; if it is 1, the self-test fails. If the self-test fails, please send command **SYSTem:ERRor?** to view the self-test error. Please refer to *Programming Guide* for the list of error codes.

Note

Ensure that all test cables connections are removed when self-test is performed. During self-test, errors may be induced by signals present on external wiring, such as long test leads that can act as antennae.

## 7.2 Cleaning and Maintenance

To ensure the safety function and performance of the instrument, please clean and maintain the instrument properly.

WARNING

- **To prevent electrical shock, disconnect the instrument from AC mains power and disconnect all test leads before cleaning.**
- **Do not use detergent or solvents.**
- **Do not disassemble the instrument and attempt to clean internally.**

Clean the outside and the front panel screen of the instrument using a soft, lint-free, cloth slightly dampened with water. Use a brush to clean the dust on the vent and cooling fans.

# 7.3 Contact of ITECH Engineers

This section describes operations to be carried out by the user in case of failure of the instrument.

### Preparation before contact

When the instrument fails, you should make the following preparations before returning the instrument to ITECH for repair or contacting engineers.

- Check all the items listed in the Self-inspection of equipment faults and confirm whether there are still some problems.
- Collect the SN of the instrument.

  For details, see Collect the SN number.

If there are still some problems, carefully read the **Warranty** and **Limitation of Warranty** in the preface of the manual. Confirm that your instrument complies with warranty service conditions. If after your warranty expires, ITECH offers repair services at competitive prices.

### Self-inspection of equipment faults

When the instrument fails, make the following checks to ensure that the failure is in the instrument rather than any external connections. If the instrument failure can be eliminated via simple inspection, the maintenance cost and time can be saved.

- Check whether the AC power cord is securely connected to the instrument and to a AC distribution panel.
- Check whether the front-panel Power On switch has been turned on.
- Check whether self-inspection of the instrument is successful and whether the specifications and performance are within the indicator ranges.

- Check whether the instrument displays error information.
- Use other instruments instead of this instrument for confirmation.

### Collect the SN number

ITECH will constantly improve the product performance, availability and reliability. The service personnel of ITECH will record changes of each instrument. All relevant information is marked uniquely according to the serial number of each instrument. The equipment returned for repair must adopt the SN number as the tracking ID.

When you contact the engineer, the effective SN number of the instrument will be the effective guarantee for effective service and complete information. You can obtain the SN number of the instrument by the following ways:

- Enter the System menu to obtain the SN.
  1. Press the composite keys **[Shift]+[P-set]** (System) on the front panel to enter the system menu.
  2. Rotate the knob to select **System Info** and press **[Enter]** key.
  3. Rotate the knob to view the SN number.

     Please record the SN number and provide SN information when doing maintenance service.
- View the barcode on the back panel of the instrument.

### How to contact ITECH engineers

Access ITECH official website www.itechate.com or call the service number 4006-025-000 for technical support and services.

## 7.4 Return for Repair

If your instrument fails during the warranty period, ITECH will repair or replace it under the terms of your warranty. After your warranty expires, ITECH offers repair services at competitive prices. Also you can purchase an extended maintenance service contract that exceeds the standard warranty period.

### Get Repair Service

To get the service for your instrument, choose the easiest way to contact the ITECH engineers. ITECH will arrange for repair or replacement of your instrument or provide warranty and repair cost information (if applicable).

## Repackaging for Shipment

**CAUTION**

**Never use styrene pellets in any shape as packaging materials. They do not adequately cushion the instrument or prevent it from shifting in the carton. Styrene pellets cause the instrument damage by generating static electricity and by lodging in the rear panel.**

ITECH recommends that you retain the original shipping carton for return shipments and always insure shipments. To ship the unit to ITECH for service or repair:

1. Download the **ITECH maintenance service application** from our website, complete it and place it in the box with the instrument.
2. Place the unit in its original container with appropriate packaging material.

   If the original shipping container is unavailable, use a container that will ensure at least 10 cm (4 in.) of compressible packaging material around the entire instrument. Use static-free packaging materials.
3. Secure the container with strong tape or metal bands.

Copyright © Itech Electronic Co., Ltd.

# A Appendix

♦ Specifications of Red and Black Test Cables
♦ Fuse Replacement

## A.1 Specifications of Red and Black Test Cables

ITECH provides you with optional red and black test cables, which are sold individually and you can select for test. For specifications of ITECH test cables and maximum current values, refer to the table below.

| Model | Specification | Length | Description |
|---|---|---|---|
| IT-E30110-AB | 10A | 1m | A pair of red and black test cables with an alligator clip at one end and a banana plug at the other end |
| IT-E30110-BB | 10A | 1m | A pair of red and black test cables with banana plugs at both ends |
| IT-E30110-BY | 10A | 1m | A pair of red and black test cables with a banana plug at one end and a Y-terminal at the other end |
| IT-E30312-YY | 30A | 1.2m | A pair of red and black test cables with Y-terminals at both ends |
| IT-E30320-YY | 30A | 2m | A pair of red and black test cables with Y-terminals at both ends |
| IT-E30615-OO | 60A | 1.5m | A pair of red and black test cables with round terminals at both ends |
| IT-E31220-OO | 120A | 2m | A pair of red and black test cables with round terminals at both ends |

Copyright © Itech Electronic Co., Ltd.

| Model | Specification | Length | Description |
|---|---|---|---|
| IT-E32410-OO | 240A | 1m | A pair of red and black test cables with round terminals at both ends |
| IT-E32420-OO | 240A | 2m | A pair of red and black test cables with round terminals at both ends |
| IT-E33620-OO | 360A | 2m | A pair of red and black test cables with round terminals at both ends |

For maximum current of AWG copper wire, refer to table below.

| AWG | 8 | 10 | 12 | 14 | 16 | 18 | 20 | 22 | 24 | 26 | 28 |
|---|---|---|---|---|---|---|---|---|---|---|---|
| The Maximum Current Value (A) | 60 | 40 | 30 | 20 | 13 | 10 | 7 | 5 | 3.5 | 2.5 | 1.7 |

**Note**

- AWG (American Wire Gage), it means X wire (marked on the wire). The table above lists current capacity of single wire at working temperature of 30°C. For reference only.
- Along with temperature, you must also consider voltage drop when selecting wire sizes.

  Although the instrument will compensate for the voltage in the wires, it is recommended to minimize the voltage drop as much as possible to prevent excessive power consumption from the instrument and poor dynamic response to load changes. Larger diameter wire sizes will help minimize wire voltage drops. Twisting or bundling wires will help reduce transient voltage drops.

# A.2 Fuse Replacement

Different models of our company product are supplied with different fuse assembly. The way to replace the fuse changes accordingly. The common ways are as follows. Please choose the corresponding way of disassembly and replacement based on the fuse assembly of the actual instrument.

**Note**

If there are no fuse assembly on the instrument rear panel, it means that you can't replace the fuse by yourself. Please contact the ITECH engineer on the condition of the same malfunction.

| The type of the fuse | The way to replace |
|---|---|
| 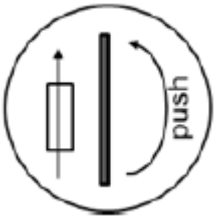 | 1. Use a screwdriver to push and turn the fuse box anti-clockwise. When turned to 90 degrees, release the screwdriver. Refer to the picture below.<br> 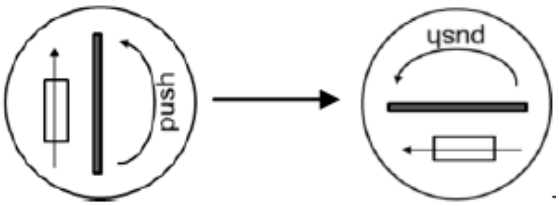 <br>2. The fuse box will bounce up, then you can see the fuse in it. Take out the blown fuse.<br>3. Please replace with a fuse of the same specification. Refer to the technical specification of the corresponding instrument.<br>4. When install, put into the fuse box as the picture below. Then use a screwdriver to push and turn the fuse box to 90 degrees clockwise. Refer to the picture below.<br> 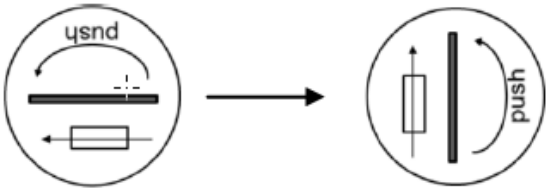 |
| 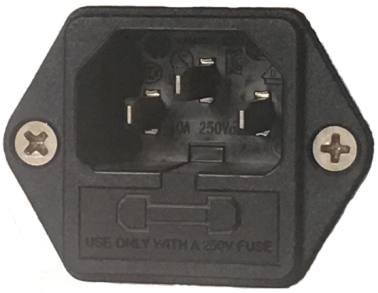 | The power cord jack of the instrument includes the fuse. Please refer to the rear panel introduction of the corresponding instrument for the detailed position. The replacement steps for this type of the fuse are as follows.<br>1. First pull out the power cord, and then take out the fuse block from the power cord jack with a small screwdriver, as shown below.<br> 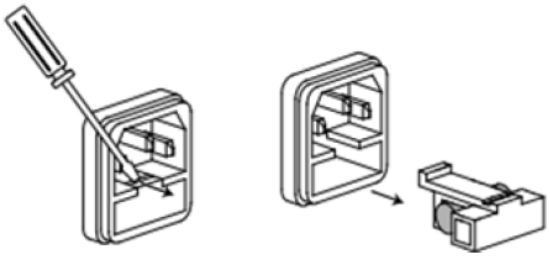 <br>2. Have a visual inspection of the fuse to see whether it is burnt out; if yes, replace it with another fuse of the same specification. Refer to the corresponding technical specifications for fuse rating. |

| The type of the fuse | The way to replace |
|---|---|
| | 3. After replacement, mount the fuse block to the original position, as illustrated below.<br> 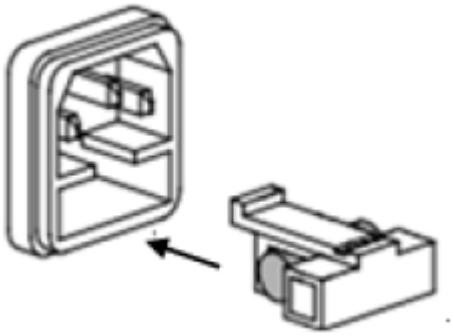 |
| 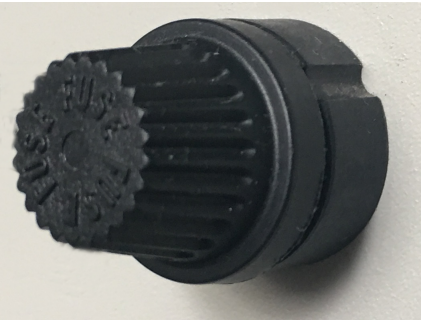 | 1. Push and turn the fuse box anti-clockwise by hand. When turned to 90 degrees, release the screwdriver.<br>2. The fuse box will bounce up, then you can see the fuse in it. Take out the blown fuse.<br>3. Please replace with a fuse of the same specification. Refer to the technical specification of the corresponding instrument.<br>4. When install, put into the fuse box firstly. Then Push and turn the fuse box to 90 degrees clockwise. |

## Connect with us

Thank you for purchasing ITECH products. Any questions, pls. feel free to let us know.

chat

You can chat with us on ITECH website

For more information, pls. visit www.itechate.com

ITECH Web

ITECH News

Click and follow ITECH Electronics

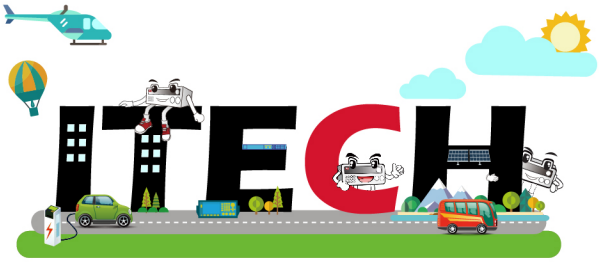

Facebook LinkedIn YouTube